A Nidec Group Company

SHIMPO

All for dreams

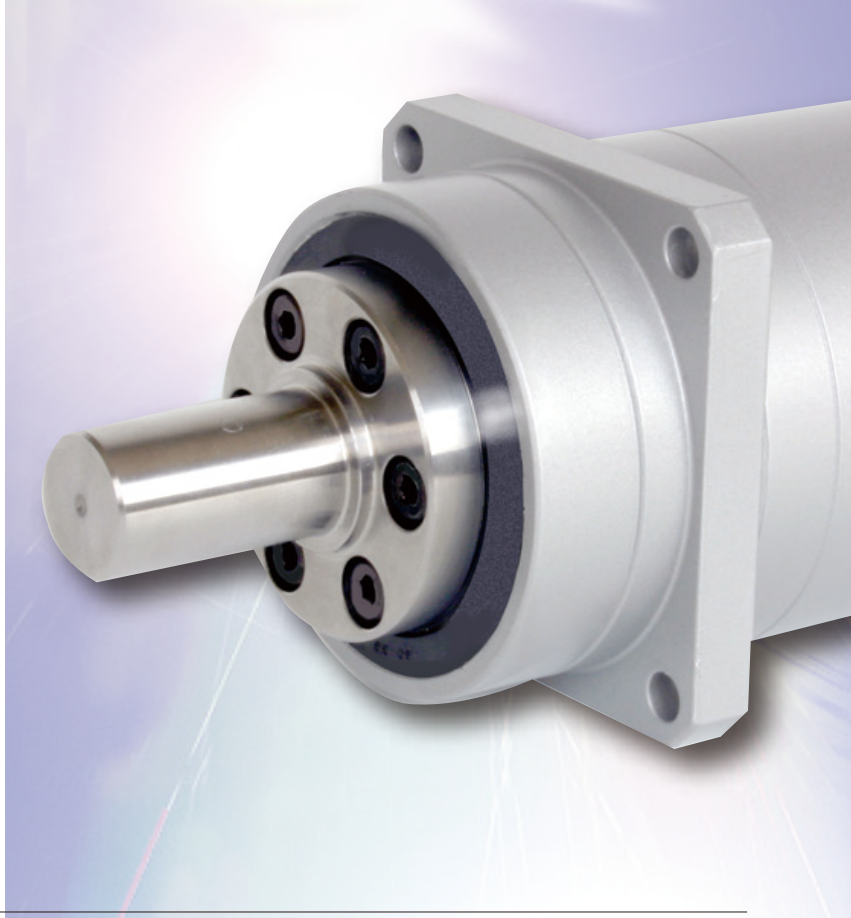

For servo motor

Reducer

ABLE REDUCER / Coronet Reducer for servo motor

ABLE REDUCER CORONET REDUCER

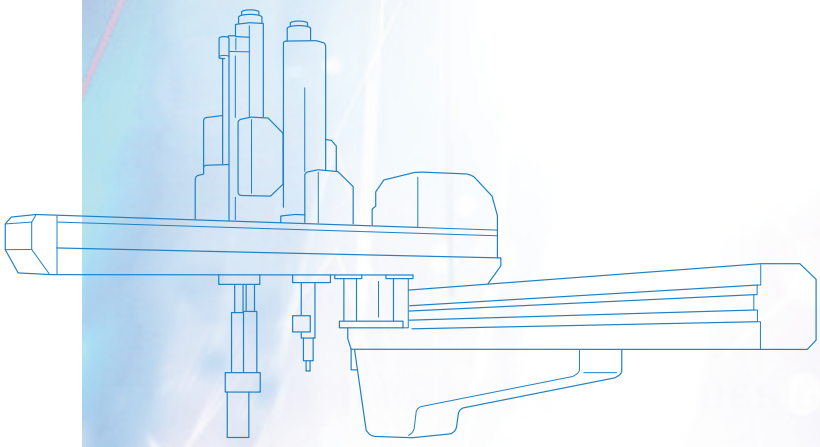

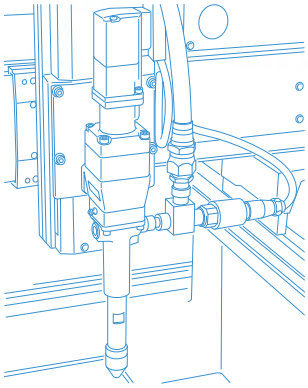

NIDEC-SHIMPO CORPORATION

Future Creation of Richer Industries - For Ceaseless Development

NIDEC-SHIMPO developed and released Ringcone CVT equipped with an independent transmission in 1952.
NIDEC-SHIMPO has continued to develop products meeting customer needs and produce new products on the basis of driving technology of reducers, etc. as well as advanced electronic technology and software development.
NIDEC-SHIMPO' s technical testing and reliability have been proven through the award of many prizes by the Japanese Machinery Society, including the National Invention Award. NIDEC-SHIMPO will offer ideal technologies and products by exactly meeting market demand for future development in various industries.

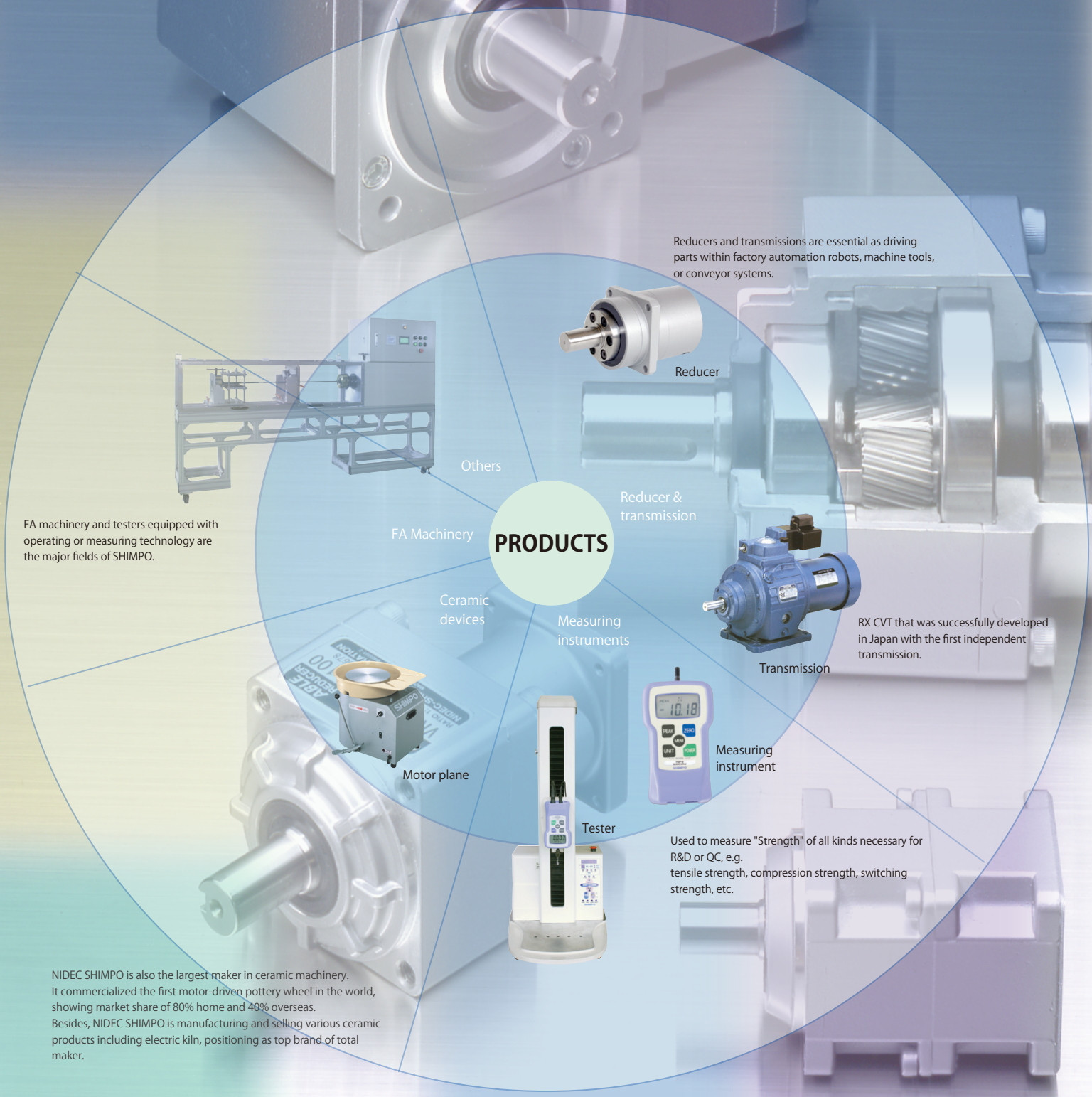

NETWORK

Bases in Japan: Tokyo branch/Nagoya branch/Kansai branch/Kita Kanto branch/
Kanajawa branch/Fukuoka branch

Tokyo branch	☎Tokyo	(03) 3494-0721	Kita Kanto branch	☎Hatokaya	(048) 287-1159
Nogoya branch	☎Nagoya	(052) 219-6781	Kansai branch	☎Kyoto	(075) 958-3670
Kanajawa branch	☎Kanajawa	(076) 233-2626	Fukuoka branch	☎Fukuoka	(092) 411-4750
Headquarters & Sales Dept.	☎Kyoto	(075) 958-3606			

NIDEC Group: NIDEC Corporation/ NIDEC SANKYO Corporation/ NIDEC COPAL / NIDEC TOSOQ Corporation/ NIDEC COPAL Electronics Corporation/ NIDEC Servo Corporation/ NIDEC LEAD Corporation/ NIDEC NIBAURA Corporation/ NIDEC KYORI Corporation/ NIDEC Logistic Corporation/ NIDEC Power Motor Corporation/ NIDEC Machinery Corporation/ NIDEC Pigeon Corporation/ NIDEC Total Service Corporation/ NIDEC NISSIN Corporation

Japan Electronics Headquarters in Kyoto

Pinghu

Shanghai

Xianggang

Headquarters, Kyoto Nagaokakyo

Chicago in U.S.

QUALITY

We are making efforts for quality improvement on the basis of the concept of total quality control.

Deming Award to be given to enterprises practicing excellent quality control

■NIDEC-SHIMPO has obtained ISO 9001/ISO 14001 certification of quality assurance.

ISO 9001

■Range of registrations

Design, development, manufacturing, and relevant service(refurbishing) of the following products:

- ●CVT
- ●Reducer
- ●Electronic measuring instrument(Digital revolution indicator/ Stroboscope
- ●Control units(digital controller)
- ●Ceramic devices(motor plane/kiln)

ISO 14001

■Range of registrations

Design, development, manufacturing, and refurbishing of CVT, reducer, measuring instruments, control units, ceramic devices, and other industrial devices

●Factories:

ISO9001&14001
DNV
REGISTERED FIRM

HISTORY

1965
1977
1984

Japanese Machinery Society Award

1959
1962
1964
1978

National Invention Award

1952

Ringcone CVT RC type release

1960

Ringcone CVT SC type release

1975

CORONET REDUCER

1987

Digital force gauge

1994

ABLE REDUCER

2008

LED digital stroboscope

Applications

Printer

Gentry robot

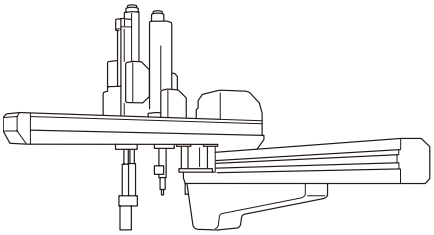

Packing machine(vertical pillow)

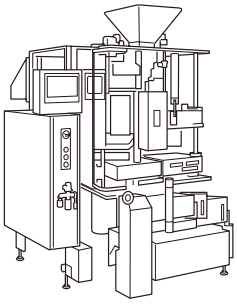

Dispenser robot

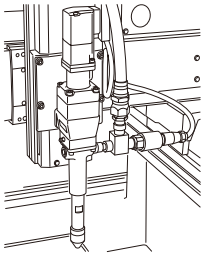

Turret head

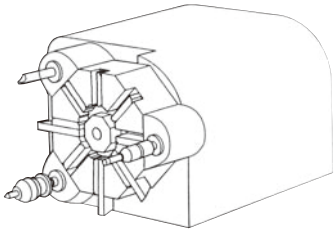

Belt conveyor

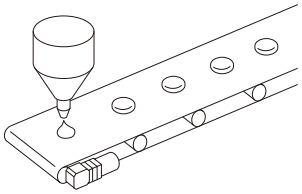

Auto packing sealing machine

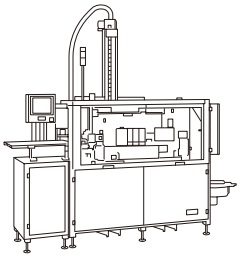

Packing machine(horizontal pillow)

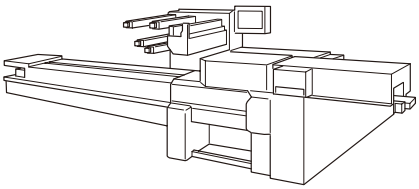

Loader robot

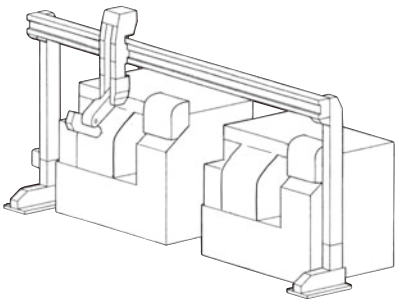

Attachable and applicable to a range of applications and devices

Index

For servo motor
Able reducer

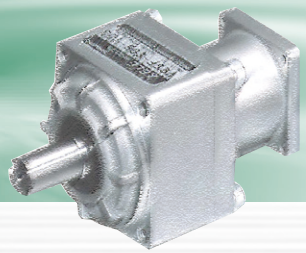

- A reducer for servo motor using a helical gear with about 10% less noise value compared to previous models
- Series including coaxial shaft precision type, right angle shaft type, and A type to large-capacity type

Coaxial type

○VRL: Ratio 1/3 ～ 1/100
○VRS: Ratio 1/3 ～ 1/100
○VR: Reduction ratio 1/3 ~ 1/81
○VRHF (large-capacity motor compatible): Reduction ratio 1/4 ~ 1/45, capacity up to 29kW acceptable
○VRAF-A (Compact type, A type compatible): Reduction ratio 1/3 ~ 1/81
○VRG (Precision type): Reduction ratio 1/3.67 ~ 1/100 Backlash 0.016° (1min)

Right angle shaft type

○NEV: Reduction ratio 1/3 ~ 1/105
○EVRG (Precision type): Reduction ratio 1/5 ~ 1/27, motor capacity up to 7kW acceptable

Hollow shaft type

○STH: Reduction ratio 1/12 ~ 1/324

VR
1~100

For Servo Motor
CORONET Reducer

- Compatible with servo motors of each supplier
  Base attachment/ flange / ring mount position, optional
- Lineup of no-backlash type to be 0.1° or less of backlash

1step reduction: Reduction ratio 1/11 ~ 1/71
2step reduction: Reduction ratio 1/121 ~ max. 1/540

EF
1~44

For servo motor

ABLE Reducer

Series & Use

Fully-featured, durable, and highly precise Able reducer keeps increasing its series to meet ever changing automation needs.

NEW

Coaxial shaft

VRL series

High rigidity type

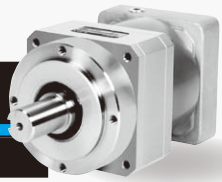

Compact but yet powerful
(for cutting and welding machines etc)

Page VR3

NEW

Coaxial shaft

VRS series

High rigidity type

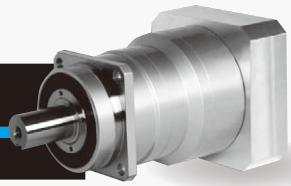

Generating highly precise and powerful torque.(for printing machine etc)

Page VR8

Coaxial shaft

VRSF series

Standard type

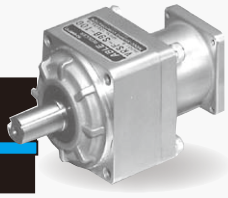

Recommended to customers requiring lightweight and space saving, e.g. gantry, packing machine, etc.

Page VR13

Coaxial shaft

VRHF series

Long life and high capacity type

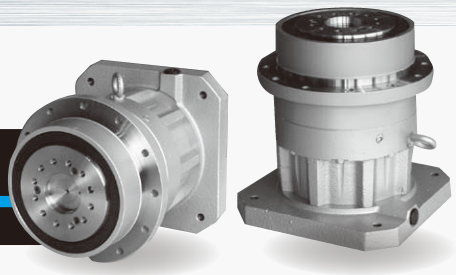

Recommended to customers requiring large torque(torque, rotary power) and long life, e.g.press, molding machine, etc.

Page VR49

Coaxial shaft

VRSF-A series

Compact type

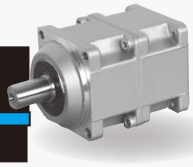

Recommended to customers who consider compact and light weight devices or equipment

Page VR57

INDEX

Coaxial shaft

VRG series

High precision type

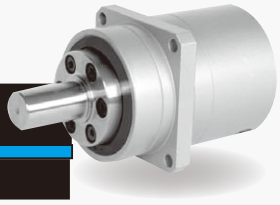

Page VR59

Recommended to customers requiring high precision of semiconductor manufacturing system, machine tools, etc.

Right angle shaft

NEV series

Standard type

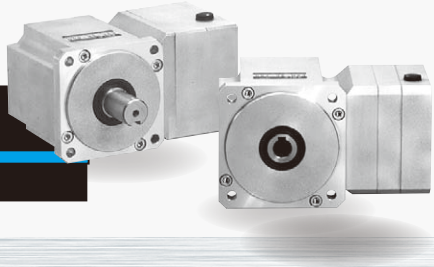

Page VR83

Recommended to customers who try to reduce length of a reducer, e.g. conveyor.

Right angle shaft

EVRG series

High precision type

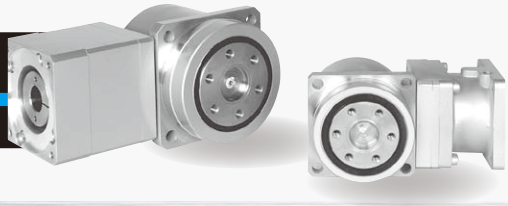

Page VR93

Recommended to customers who try to reduce length of a reducer, e.g. conveyor, and at the same time gain high precision.

Hollow shaft

STH series

Hollow type

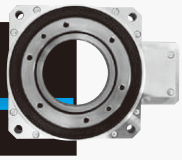

NEW

Page VR99

Minimizing space by letting cables and shaft go through. (for turn table applications etc)

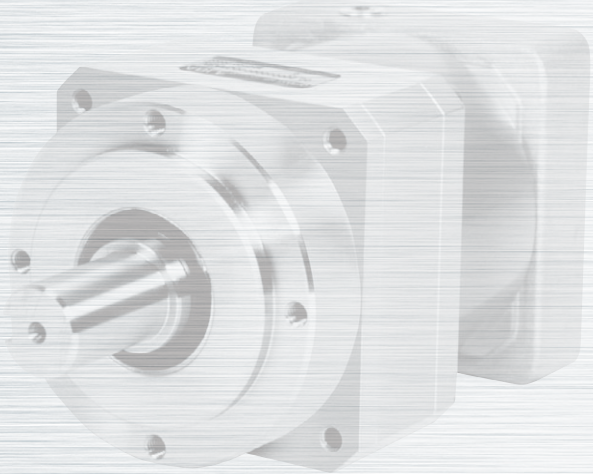

Features

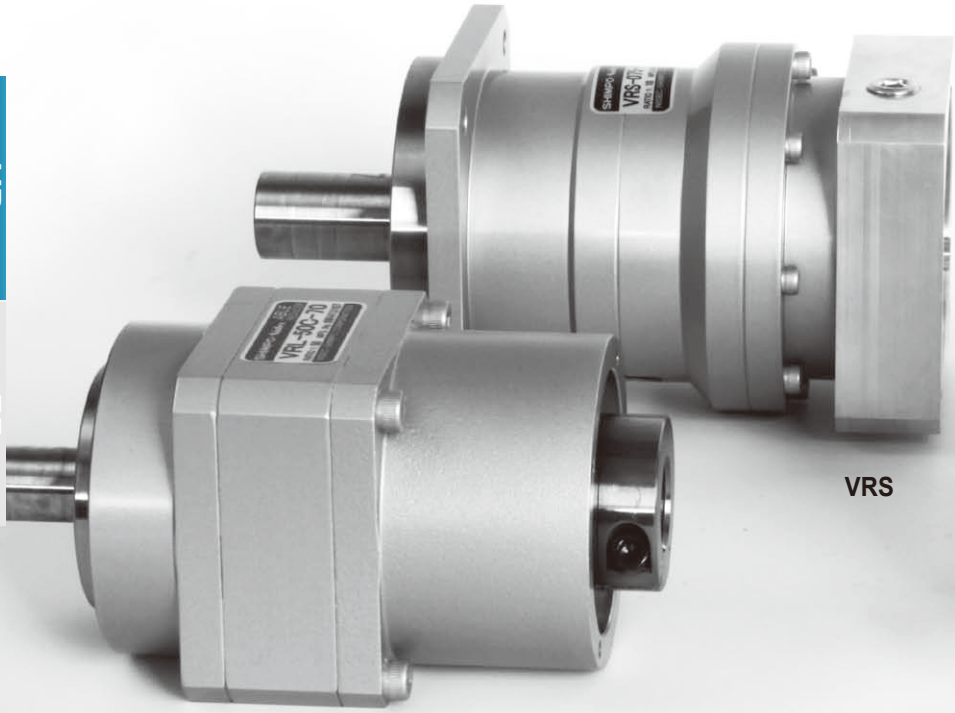

VRS

VRL

VRS

VRL series — "Noiseless" and "Firm Body"

Quiet operation

Helical gear contribute to reduce vibration and noise.

Firm Body

Internal teeth are machined to the steel body directly to produce high output torque.

Long Service Life

The high-class grease in ABLE reducer gives permanent lubrication. No need to replace the grease for the life time (20,000 hours).

Easy mounting

Motor can be mounted easily with adapter flange and bushing (without key). Applicable to each brand's servomotors.

Variety of Ratios

We can offer the fourteen ratios and anaible from 1/3 to 1/100.

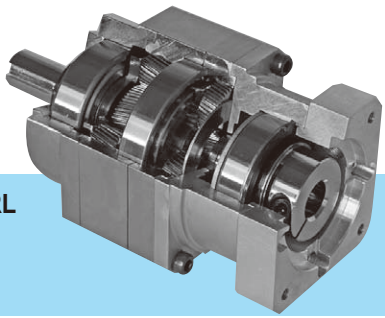

VRL

Automatic Labor Saving Machine

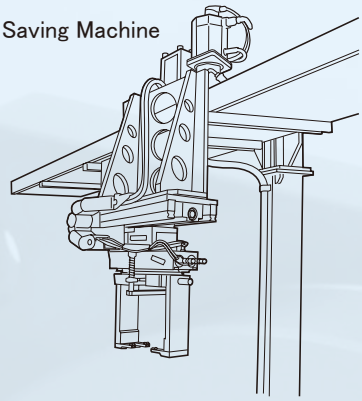

Medical Machinery

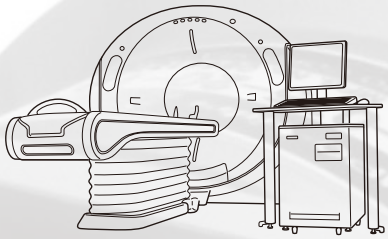

Extruders

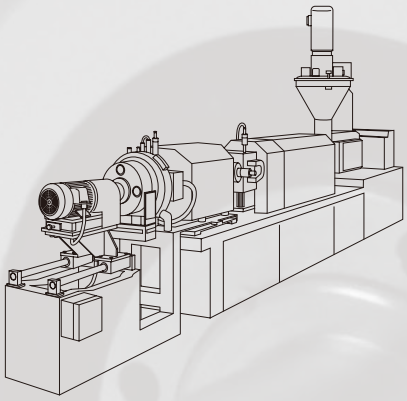

Automatic Labor Saving Machine

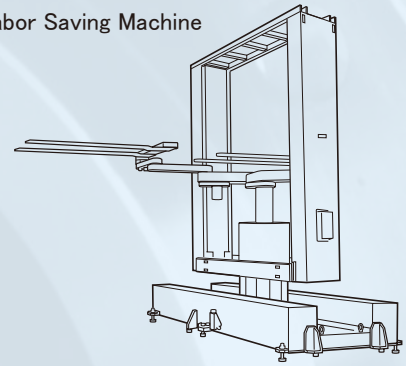

VRS series — "Hight precision" and "Hight rigidity"

Quiet operation

Helical gear contribute to reduce vibration and noise.

High precision

Standard backlash is 3 arc-min,ideal for precision control.

High rigidity

Employing taper roller bearing for the main output shaft to increase radial and axiol load.

Long Service Life

The high-class grease in ABLE reducer gives permanent lubrication. No need to replace the grease for the life time (20,000 hours).

Easy mounting

Motor can be mounted easily with adapter flange and bushing (without key).
Applicable to each brand's servomotors.

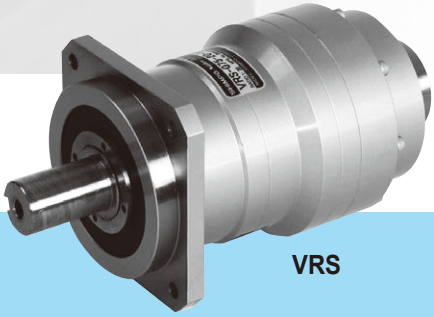

VRS

MODEL NUMBER CHART

"Noiseless" and "Firm Body"

■Model Number Chart

ABLE reducer — Servo Motor

VR L — 090 — 7 — K 5 — 19HB16

- VR: Model Name for ABLE reducer
- L: VRLseries
- 090: Frame Size: 050、070、090、120
- 7: Ratio:
  1/3、4、5、7、10(Single Reduction)
  1/15、20、25、30、35、40、50、70、100(Double Reduction)
- K: K: Shaft with keyway
- 5: Best-In-Class Standard Backlash 5 arc-min
- 19HB16: Mount code varies depending on the motor

Adapter: The flange-shaped component for installing the servomotor to the gear reducer.

Bushing: In case the diameters of the output shaft of the servomotor and the input shaft of the gear reducer have different dimensions, this component can be inserted into the input shaft of the gear reducer as for the figure below. This makes the reducer's input shaft diameter to be equal to the output shaft of the servomotor.

Example: Mount code

19 HB 16

- 16: Output Shaft Diameter of the Servomotor
- HB: ※Adapter Code: Refer to the P.8 "Instruction of the Servo Reducer Selection Tool".:
  ※Please consult us for other Adapter Code if necessary.
- 19: Bore Dimension of the Input Shaft of the Gear Reducer: 8, 14, 19, 28, 38, 45, & 65

Note: The ϕ16 bushing needs to be inserted into the input shaft of the gear reducer for the above case.

■Image of the Bushing

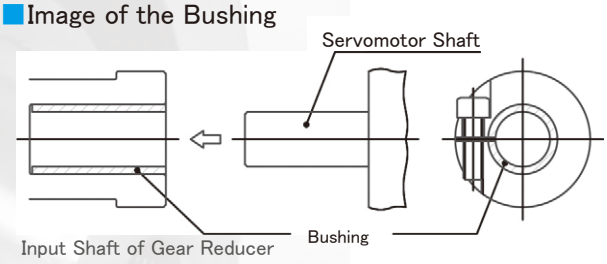

■VRL Series Specifications

Frame Size	Stages	Ratio	※1 Nominal Output Torque [Nm]	※2 Maximum Output Torque [Nm]	※3 Emergency Stop Torque [Nm]	※4 Nominal Input Speed [rpm]	※5 Maximum Input Speed [rpm]	※6 Permitted radial load [N]	※7 Maximum radial load [N]	※8 Permitted axial load [N]	※9 Maximum axial load [N]	※10 Permitted moment [Nm]	※11 Weight [kg]
050	Single	3	7	14	28	4000	8000	410	700	350	700	34	0.9
		4	7.5	15	30	4000	8000	440		390			
		5	7.5	15	30	4000	8000	470		420			
		7	7.5	15	30	4000	8000	520		480			
		10	7	14	28	4000	8000	590		560			
	Double	15	7	14	28	4000	8000	670		680			1.1
		20	7.5	15	30	4000	8000	700		700			
		25	7.5	15	30	4000	8000	700		700			
		30	7	14	28	4000	8000	700		700			
		35	7.5	15	30	4000	8000	700		700			
		40	7.5	15	30	4000	8000	700		700			
		50	7.5	15	30	4000	8000	700		700			
		70	7.5	15	30	4000	8000	700		700			
		100	7	14	28	4000	8000	700		700			
070	Single	3	20	40	80	3700	6000	800	1700	1000	1700	117	2.4
		4	25	50	100	3700	6000	850		1200			
		5	25	50	100	3700	6000	910		1300			
		7	25	50	100	3700	6000	1000		1500			
		10	20	40	80	3700	6000	1100		1700			
	Double	15	20	40	80	3700	6000	1300		1700			3
		20	25	50	100	3700	6000	1400		1700			
		25	25	50	100	3700	6000	1500		1700			
		30	20	40	80	3700	6000	1600		1700			
		35	25	50	100	3700	6000	1600		1700			
		40	25	50	100	3700	6000	1700		1700			
		50	25	50	100	3700	6000	1700		1700			
		70	25	50	100	3700	6000	1700		1700			
		100	20	40	80	3700	6000	1700		1700			
090	Single	3	45	90	200	3400	6000	1000	3400	1200	3400	277	4.7
		4	50	100	200	3400	6000	1100		1300			
		5	50	100	200	3400	6000	1200		1500			
		7	50	100	200	3400	6000	1300		1700			
		10	45	90	200	3400	6000	1500		1900			
	Double	15	45	90	200	3400	6000	1700		2400			5.5
		20	50	100	200	3400	6000	1900		2600			
		25	50	100	200	3400	6000	2000		2900			
		30	45	90	200	3400	6000	2200		3100			
		35	50	100	200	3400	6000	2200		3300			
		40	50	100	200	3400	6000	2300		3400			
		50	50	100	200	3400	6000	2500		3400			
		70	50	100	200	3400	6000	2800		3400			
		100	45	90	200	3400	6000	3100		3400			
120	Single	3	101	202	480	2600	4800	1800	4800	2000	4800	490	8.9
		4	113	226	480	2600	4800	1900		2200			
		5	113	226	480	2600	4800	2000		2400			
		7	113	226	480	2600	4800	2200		2700			
		10	101	202	480	2600	4800	2500		3200			
	Double	15	101	202	480	2600	4800	2900		3800			10
		20	113	226	480	2600	4800	3200		4200			
		25	113	226	480	2600	4800	3400		4600			
		30	101	202	480	2600	4800	3700		4800			
		35	113	226	480	2600	4800	3800		4800			
		40	113	226	480	2600	4800	3900		4800			
		50	113	226	480	2600	4800	4200		4800			
		70	113	226	480	2600	4800	4700		4800			
		100	101	202	480	2600	4800	4800		4800			

※1 With nominal input speed, service life will be 20,000hours.
※2 The maximum torque when starting and stopping.
※3 The maximum torque when it receives shock (up to 1,000times)
※4 The maximum average input speed.
※5 The maximum momentary input speed.
※6 With this load and nominal input speed, service life will be 20,000 hours.
※7 The maximum value the reducer can accept.
※8 With this load and nominal input speed, service life will be 20,000 hours.
※9 The maximum value the reducer can accept.
※10 The maximum value the reducer can accept.
※11 The weight may vary slightly model to model.

■VRL Series Dimensions

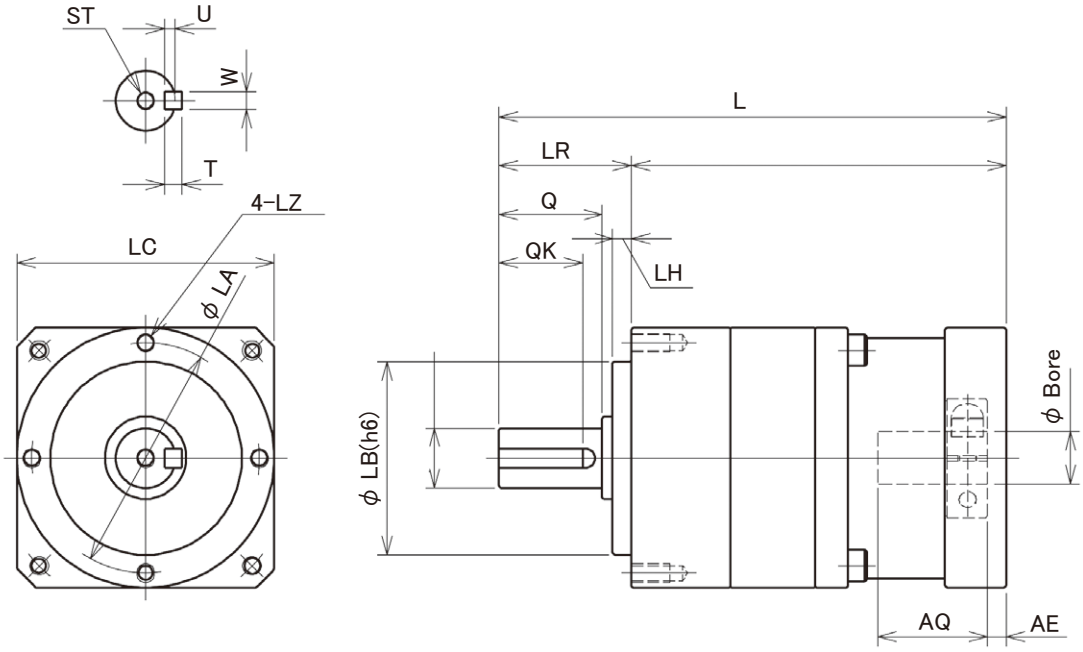

Frame Size	Stages ※1	Bore ※2	Dimensions																
			LA	LB	LC	LZ	LH	LR	LM ※3	L ※3	Q	S	ST	W	T	U	QK	AE ※3	AQ ※3
050	Single	≦8	44	35	50	M4 Depth7	4	24.5	78	102.5	18	12	M4 Depth7	4	4	2.5	13	5	27
		≦14							81	105.5								5	30
	Double	≦8							94	118.5								5	27
		≦14							97	121.5								5	30
070	Single	≦14	62	52	70	M5 Depth10	5	36	95.5	131.5	28	16	M5 Depth10	5	5	3	22	5	30
		≦19							107.5	143.5								7	43
	Double	≦8							111	147								5	27
		≦14							114	150								5	30
090	Single	≦19	80	68	90	M6 Depth12	5	46	116.5	162.5	36	22	M8 Depth13	6	6	3.5	28	7	43
		≦28							133.5	179.5								12	55
	Double	≦14							123.5	169.5								5	30
		≦19							133.5	179.5								7	43
120	Single	≦28	108	90	120	M8 Depth16	8	70	145.5	215.5	58	32	M12 Depth22	10	8	5	45	12	55
		≦38							160.5	230.5								15	67
	Double	≦19							148	218								7	43
		≦28							165	235								12	55

[mm]

※1 Single Reduction: Ratio 1/3～1/10, Double reduction: Ratio 1/15～1/100.
※2 Bushing will be inserted to adapt to motor shaft.
※3 Length will vary depending on motor adapter flange.

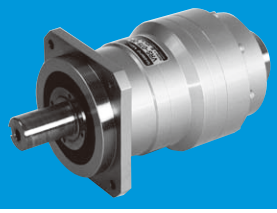

■Model Number Chart

ABLE reducer | Servo Motor

VR S — 075 — 5 — K 3 — 19HB16

- VR: Model Name for ABLE reducer
- S: VRSseries
- 075: Frame Size: 060、075、100、140、180
- 5: Ratio:
  1/3、4、5、7、10Single Reduction)
  1/16、20、25、28、35、40、50、70、100(Double Reduction)
- K: K: Shaft with keyway
- 3: Best-In-Class Standard Backlash 3 arc-min
- 19HB16: Mount code varies depending on the motor

Adapter: The flange-shaped component for installing the servomotor to the gear reducer.

Bushing: In case the diameters of the output shaft of the servomotor and the input shaft of the gear reducer have different dimensions, this component can be inserted into the input shaft of the gear reducer as for the figure below. This makes the reducer's input shaft diameter to be equal to the output shaft of the servomotor.

Example: Mount code

19 HB 16

- 16: Output Shaft Diameter of the Servomotor
- HB: ※Adapter Code: Refer to the P.8 "Instruction of the Servo Reducer Selection Tool".:
  ※Please consult us for other Adapter Code if necessary.
- 19: Bore Dimension of the Input Shaft of the Gear Reducer: 8, 14, 19, 28, 38, 45, & 65

Note: The ϕ16 bushing needs to be inserted into the input shaft of the gear reducer for the above case.

■Image of the Bushing

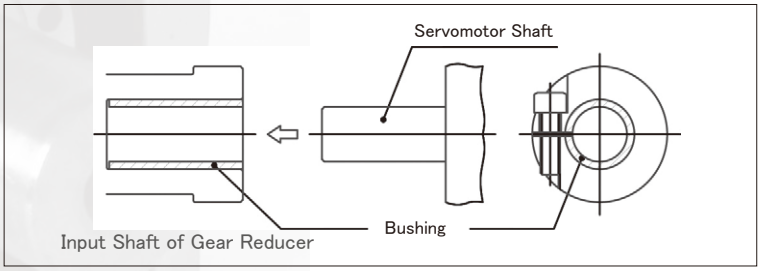

■VRL Series Specifications

Frame Size	Stages	Ratio	※1 Nominal Output Torque [Nm]	※2 Maximum Output Torque [Nm]	※3 Emergency Stop Torque [Nm]	※4 Nominal Input Speed[rpm]	※5 Maximum Input Speed [rpm]	※6 Permitted radial load [N]	※7 Maximum radial load [N]	※8 Permitted axial load [N]	※9 Maximum axial load [N]	※10 Permitted moment [Nm]	※11 Weight [kg]
060	Single	3	17	36	80	3300	6000	1600	2800	2100	2500	152	1.8
		4	26	40	100	3300	6000	1700		2200			
		5	26	40	100	3300	6000	1900		2400			
		7	26	40	100	4000	6000	1900		2500			
		10	26	36	80	4000	6000	2200		2500			
	Double	16	26	40	100	4400	6000	2500		2500			2.0
		20	26	40	100	4400	6000	2600		2500			
		25	26	40	100	4400	6000	2800		2500			
		28	26	40	100	4400	6000	2800		2500			
		35	26	40	100	4400	6000	2800		2500			
		40	26	40	100	4400	6000	2800		2500			
		50	26	40	100	4800	6000	2800		2500			
		70	26	40	100	5500	6000	2800		2500			
		100	26	36	80	5500	6000	2800		2500			
075	Single	3	47	90	200	2900	6000	2200	4200	3200	3400	265	3.4
		4	75	125	250	2900	6000	2400		3400			
		5	75	125	250	2900	6000	2500		3400			
		7	75	125	250	3100	6000	2700		3400			
		10	75	90	200	3100	6000	3000		3400			
	Double	16	75	125	250	3500	6000	3400		3400			4.3
		20	75	125	250	3500	6000	3700		3400			
		25	75	125	250	3500	6000	3900		3400			
		28	75	125	250	3500	6000	4000		3400			
		35	75	125	250	3500	6000	4200		3400			
		40	75	125	250	3500	6000	4200		3400			
		50	75	125	250	3800	6000	4200		3400			
		70	75	125	250	4500	6000	4200		3400			
		100	75	90	200	4500	6000	4200		3400			
100	Single	3	120	240	500	2500	4500	3500	6500	4600	5800	530	7.7
		4	180	320	625	2500	4500	3700		4900			
		5	180	320	625	2500	4500	3900		5000			
		7	180	320	625	2800	4500	4200		5400			
		10	180	240	500	2800	4500	4700		5800			
	Double	16	180	320	625	3100	4500	5300		5800			10
		20	180	320	625	3100	4500	5700		5800			
		25	180	320	625	3100	4500	6100		5800			
		28	180	320	625	3100	4500	6300		5800			
		35	180	320	625	3100	4500	6500		5800			
		40	180	320	625	3100	4500	6500		5800			
		50	180	320	625	3500	4500	6500		5800			
		70	180	320	625	4200	4500	6500		5800			
		100	180	240	500	4200	4500	6500		5800			
140	Single	3	200	500	1000	2100	4000	7500	10000	10000	10000	1100	18
		4	360	650	1250	2100	4000	8100		10000			
		5	360	650	1250	2100	4000	8600		10000			
		7	360	650	1250	2600	4000	8900		10000			
		10	360	500	1000	2600	4000	9900		10000			
	Double	16	360	650	1250	2900	4000	10000		10000			22
		20	360	650	1250	2900	4000	10000		10000			
		25	360	650	1250	2900	4000	10000		10000			
		28	360	650	1250	2900	4000	10000		10000			
		35	360	650	1250	2900	4000	10000		10000			
		40	360	650	1250	2900	4000	10000		10000			
		50	360	650	1250	3200	4000	10000		10000			
		70	360	650	1250	3200	4000	10000		10000			
		100	360	500	1000	3900	4000	10000		10000			
180	Single	3	530	1000	2200	1500	3500	14000	15000	15000	15000	1910	39
		4	750	1400	2750	1500	3500	15000		15000			
		5	750	1400	2750	1500	3500	15000		15000			
		7	750	1400	2750	2300	3500	15000		15000			
		10	750	1000	2200	2300	3500	15000		15000			
	Double	16	750	1400	2750	2700	4000	15000		15000			48
		20	750	1400	2750	2700	4000	15000		15000			
		25	750	1400	2750	2700	4000	15000		15000			
		28	750	1400	2750	2700	4000	15000		15000			
		35	750	1400	2750	2700	4000	15000		15000			
		40	750	1400	2750	2700	4000	15000		15000			
		50	750	1400	2750	2900	4000	15000		15000			
		70	750	1400	2750	3200	4000	15000		15000			
		100	750	1000	2200	3400	4000	15000		15000			

※1 With nominal input speed, service life will be 20,000hours.
※2 The maximum torque when starting and stopping.
※3 The maximum torque when it receives shock (up to 1,000times)
※4 The maximum average input speed.
※5 The maximum momentary input speed.
※6 With this load and nominal input speed, service life will be 20,000 hours.
※7 The maximum value the reducer can accept.
※8 With this load and nominal input speed, service life will be 20,000 hours.
※9 The maximum value the reducer can accept.
※10 The maximum value the reducer can accept.
※11 The weight may vary slightly model to model.

■VRS Series Dimensions

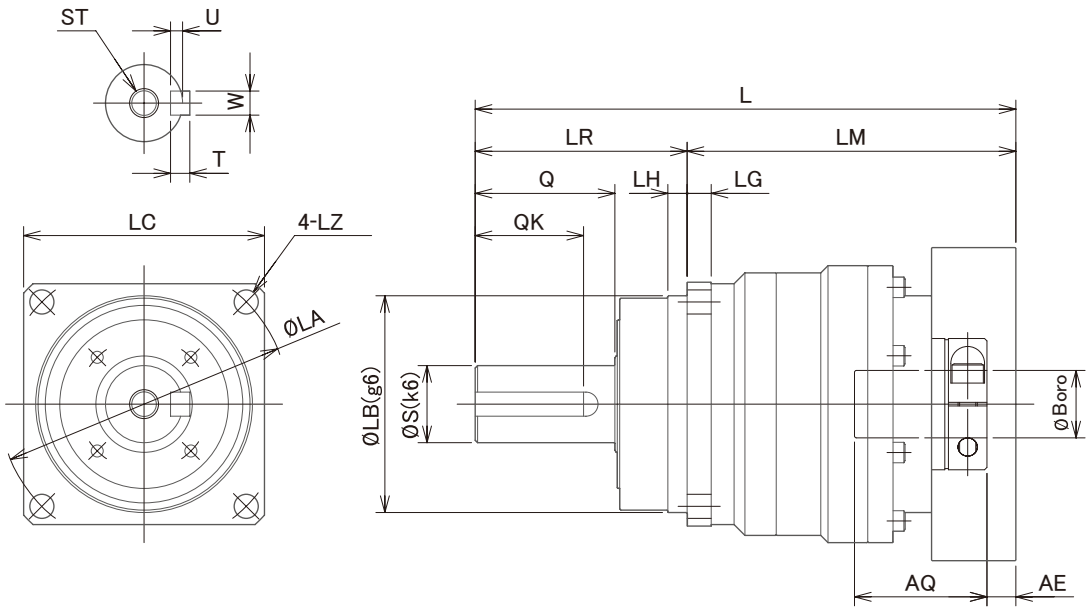

Fram Size	Stages ※1	Bore ※2	Dimensions																	
			LA	LB	LC	LZ	LG	LH	LR	LM	L	Q	S	ST	W	T	U	QK	AE※3	AQ※3
060	Single	≦8	68	60	60	5.5	6	5	48	85.5	133.5	28	16	M5 Depth 12.5	5	5	3	22	5	27
		≦14								89	137								5	30
		≦19								105.5	153.5								7	43
	Double	≦8								110	158								5	27
		≦14								113.5	161.5								5	30
075	Single	≦14	85	70	75	7.5	7	6	56	103	159	36	22	M8 Depth 19	6	6	3.5	28	5	30
		≦19								113	169								7	43
		≦28								130	186								12	55
	Double	≦8								122.5	178.5								5	27
		≦14								131	187								5	30
		≦19								141	197								7	43
100	Single	≦19	120	90	100	10	10	8	88	122	210	58	32	M12 Depth 28	10	8	5	45	7	43
		≦28								136.5	224.5								12	55
		≦38								151.5	239.5								15	67
	Double	≦14								141	229								5	30
		≦19								151	239								7	43
		≦28								168	256								12	55
140	Single	≦28	165	130	140	11	12	10	112	157	269	82	40	M16 Depth 36	12	8	5	65	12	55
		≦38								172	284								15	67
		≦48								188	300								10	88
	Double	≦19								174.5	286.5								7	43
		≦28								189.5	301.5								12	55
		≦38								207	319								15	67
180	Single	≦38	215	160	180	13.5	15	12	112	203	315	82	55	M20 Depth 42	16	10	6	63	15	67
		≦48								219	331								10	88
		≦65								263	375								20	102
	Double	≦28								228	340								12	55
		≦38								244	356								15	67
		≦48								268	380								10	88

※1 Single Reduction: Ratio 1/3～1/10, Double reduction: Ratio 1/15～1/100.
※2 Bushing will be inserted to adapt to motor shaft.
※3 Length will vary depending on motor adapter flange.

[mm]

Servo Motor Assembly Installation

Reducers can be fixed to servo motors quite easily. Everybody can do it for himself.

1 Servo Motor Assembly Installation

※ Wipe out the anticorrosive oil on the Motor shaft.

(1)Remove the Rubber Cap and turn the Input Shaft until the Cap Screw is seen.Make sure the set bolt is loosened.

(2)Carefully insert Servo Motor Shaft into the Input Shaft . (It should be inserted smoothly.)
Make sure to insert motor straight. Please confirm the surface of the flanges of the motor and the reducer are fixed with no clearance.

(3)Install the Servo Motor to the reducer and tighten the Motor Fixing Bolts to the proper torque. Refer to the table below.

(4)Tighten the Cap Screw of the Input Shaft with a Torque Wrench to the proper torque.Refer to the table below.

(5)Reinstall the rubber cap.

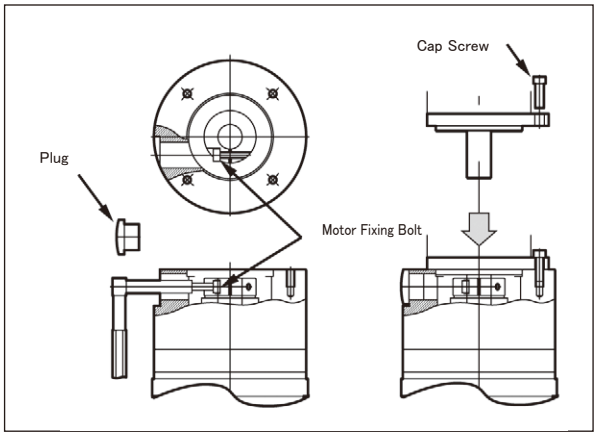

【Bolt tightening torque】

Bolt Size	Motor Fixing Bolt		Screw Bolt	
	Nm	kgfm	Nm	kgfm
M3	1.0	0.10	1.8	0.18
M4	2.3	0.23	4.3	0.44
M5	4.7	0.48	8.7	0.89
M6	8.0	0.82	15	1.5
M8	19	1.9	36	3.7
M10	38	3.9	72	7.3
M12	67	6.8	125	12.8

2 Installation of Reducer

(1)In case you attach the servo motor by yourself, please be aware of cautions below.

(2)Please make sure to fit the servo motor that was specified when ordering.Other motor model may be unacceptable because the input flange of the ABLE reducer is made for a particular motor.

(3)The output shaft of the servo motor can be covered by anticorrsive oil.

【Bolt tightening torque for reducer】

Bolt Size	Motor Fixing Bolt	
	Nm	kgfm
M5	6.3	0.63
M6	11	1.1
M8	26	2.7
M10	51	5.2
M12	89	9.1

Please access the URL under to start the selection.

http://www.nidec-shimpo.co.jp/en/index.html

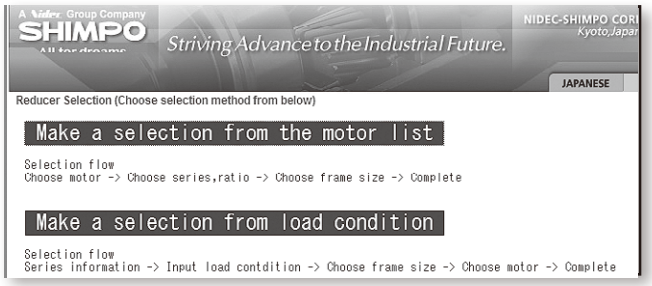

Click “Make a selection from the motor list”.

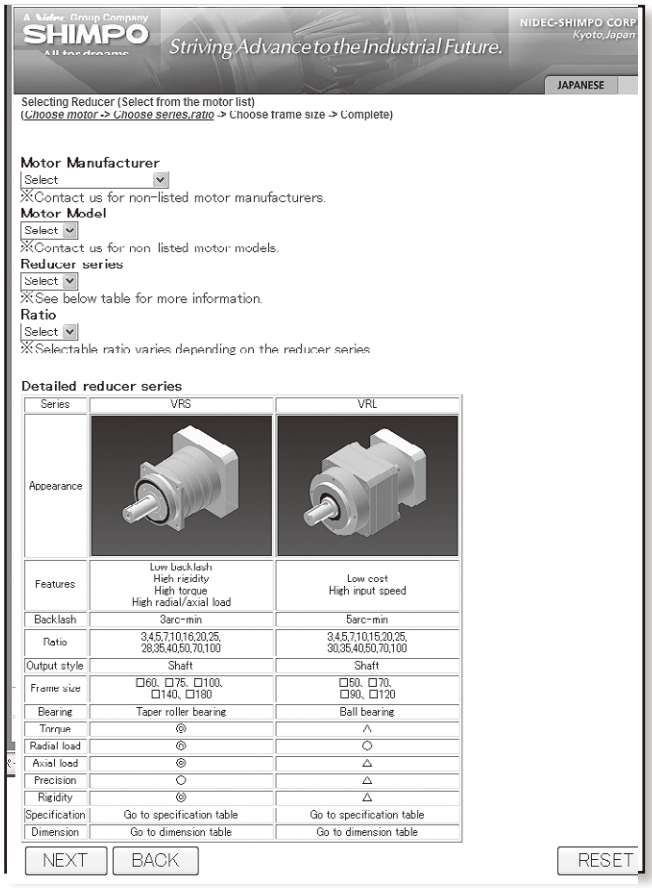

Select the Motor Manufacturer, Motor Model, Reducer series and Ratio.

Click “NEXT”.To amend the motor information, click “BACK”.

The selection tool shows all combinations.The item which shows “OK” is available combination. The item which shows “NG” means this combination cannot be applied.

Characteristics & Merits

Realized maximum noise reduction that could not be obtained from existing reducers

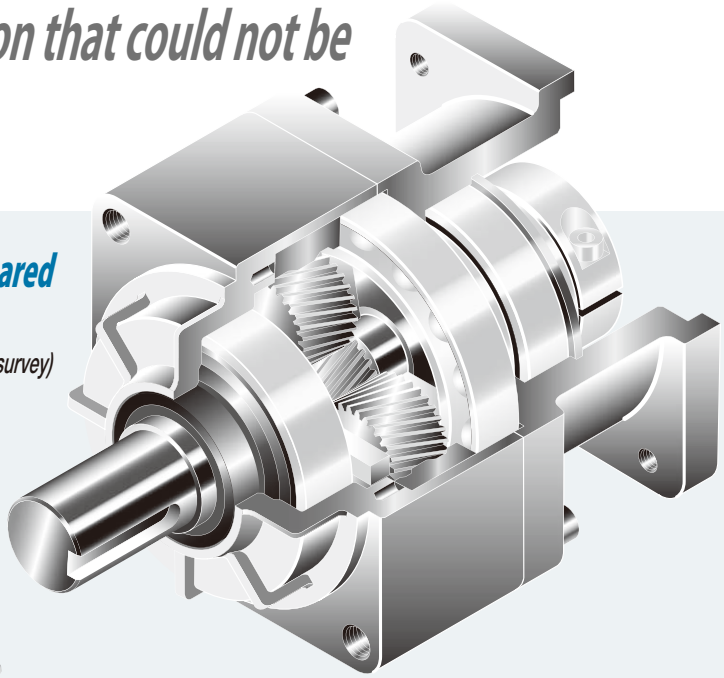

Realized noise reduction by 10% or more compared to existing products

(According to our survey)

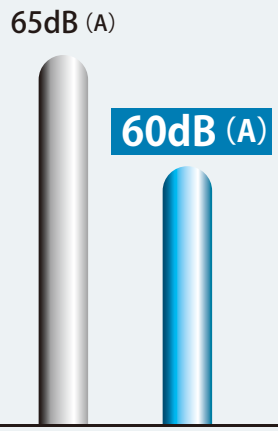

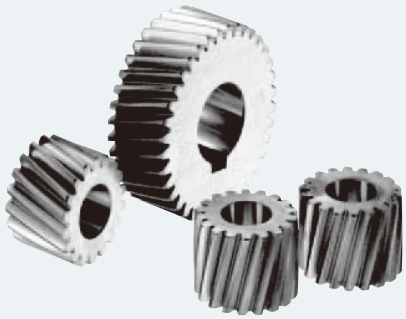

* The helical gear, as shown in the above figure, is tilted to the shaft of the engaging gear(contrary to parallel for existing gears). It makes engagement of a gear smoother compared to previous parallel gears, realizing noise reduction.

※All of helical gears are being adopted in type number(A/B/C/D/E).

Previous product New product Representative type no.(VRSF-S9B-100)

High precision type of 0.05°(3 min) or less of backlash, low-backlash 0.08°(5 min) into series

This reducer is characterized by a high-precision servo motor with a merit of precision positioning

Smooth rotation with little shaking

This reducer is characterized by a high-precision servo motor with a merit of precision positioning.

The difference is 22mm(for D type): Compact(small size) design according to designer's demand

Compact size of 98mm(120mm for the same model of a rival company)
This is compact design coping with a servo motor of compact and light-weight design.

Offers high-quality products in excellent assembling conditions

Products are assembled in clean room.
This assembling condition guarantees high-quality products.

Maintenance free & free jointing

No need for replacement by using long-life high grade grease as lubricant. In addition, it is seal-filled and thus the jointing and attaching position is free changeable.

Complete measure against a lubricant leak

Out-and-out measures against a leak, e.g. impregnation of a case, air-leak test, etc.

IP65-compatible(option)

Reducer performance is fully exercised even in various conditions with waterproof function. *(※ optional)*

Combinable to compact servo motors of each supplier

Attachable to servo motors of the following makers:

●PANASONIC ●FANUC ●NIKKI DENKO ●YASKAWA ELECTRIC ●SHIMPONIA TECHNOLOGY
●MIKI FULLEY ●MITSUBISHI ELECTRIC ●TOSHIBA MACHINE ●HITACHI INDUSTRIAL EQUIPMENT SYSTEMS
●OMRON ●SANYO DENKI
●KEYENCE ●TAMAGAWA SEIKI ●FUJI ELECTRIC SYSTEMS ●SANMEI ●NIDEC SANKYO

Delivery in 3 days

Available of Short-term delivery

ABLE REDUCER

Arrival at 3 days after an order is received.

1 day	2 day	3 day
Order receipt	Delivery	Arrival

※Some models may be excluded from subjects according to motor capacity.

Type no., reduction ratio

Capacity(W) \ Reduction ratio	1step reduction			2step reduction			
	1/3	1/5	1/9	1/15	1/20	1/25	1/35
50W	B type						
100W	B type						
200W	B type		C type				
400W	B type		C type				D type
750W			D type				

●Type no. : B~D types(range mentioned in the above table) ●Reduction ratio: 1/3~1/35 ●Backlash: PB・LB, standard types
●Attachment mode: VRSF series(attachable only to a motor with key slot)

Series of attached servo motors

Panasonic	MSMA MSMD MUMA MBMK MSME
Yaskawa Electric	SGM SGMAH SGMAS SGMJV SGMAV SJME
Mitsubishi Electric	HC-KFS HC-MFS HC-PQ HC-KQ HF-KP HF-MP HF-KN
Omron	R88M-K R88M-U R88M-W R88M-G R7M-A R7M-Z
Fuji Electric Systems	GYS
Sanyo denki	P30B Q1
Tamagawa seiki	TBL-i TBL-i II
Miki Pulley	SA3
Nikki denso	NA50 NA70 NA80
Keyence	MV SV
Hitachi Industrial Equipment Systems	ADMA
Sanmei	TS SS

■Available conditions of short-term delivery

※Number of lots : 10 units or less for the same model
※Supplied motors: If a motor supplied by our company is attached, it is excluded from subjects.
※Shaft-specific processing: In case of tab processing of the output shaft, it is excluded from subjects.

Model & type symbol

ABLE REDUCER | Servo motor

VR S F - □ - 15 C - 400 - □ - Designate type no. of the motor manufacturer.

- Type no.
- Manufacturer name
- Applicable servo motor capacity(W)
- Reducer type no.
- Reduction ratio / 1step types 3, 5, S9
  2step types 15, 20, 25, 35, 45, 81
  ※The reduction ratios are actual ones.
- Reducer spec. / no symbol: Standard
  PB: High precision type
  LB: Low-backlash type

■Amount of backlash※

Reducer type no.	V R - □ (Standard type)	VR-LB (Low-backlash type)	VR-PB (High precision type)
B type	0.25° (15arc-min)	0.166° (10arc-min)	0.05° (3arc-min)
C type	0.25° (15arc-min)	0.08° (5arc-min)	0.05° (3arc-min)
D type	0.25° (15arc-min)	0.08° (5arc-min)	0.05° (3arc-min)
E type	0.25° (15arc-min)	0.08° (5arc-min)	0.05° (3arc-min)

- Attachment mode and output shaft direction / F: flange type, free attachment direction
  D: D flange attachment type, free attachment direction
- Input part type / clamp fastening mode(The motor shaft is compatible with both key slot exclusion type and attachment type /(<D cut unavailable)※1
  →※See VR89 page.

■Attachment available:

K : Coupling(straight shaft, key slot attachment)※2
A : Adaptor mode(For details, contact us.)

※1 D cut is only compatible with K type.
※2 Response only to a special order. For more details, contact us.

- Name of ABLE REDUCER

■Dimensional drawing of D flange attachment type

(Unit: mm)

Type no.	F G	F R	F E	F B	F C	F A	F Z
B	8	24	3	50	75	65	6
C	12	33.5	3	72	110	95	7
D	13	48	5	90	134	115	8.8

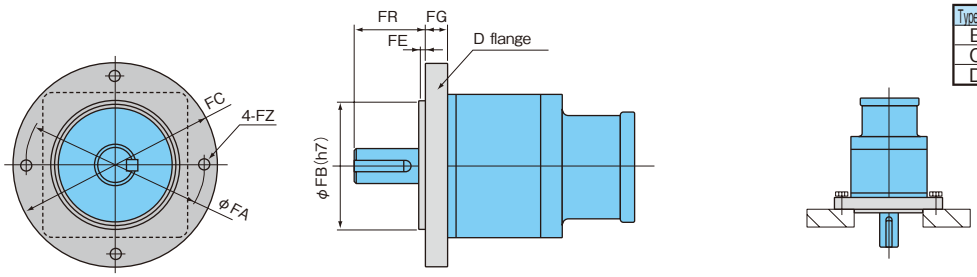

※In case of attachment as mentioned in the above figure, designate D flange(separate selling) attachment. Also, the D flange may be attached later.

■Processing of output shaft tab (option)

B type : M5×10 C type : M6×12(or M8×16) D type : M8×16(or M6×12) E type : M10×20

Reduction ratio & type no.

■When input speed is 3000rpm

Motor cap.(W) \ Reduction ratio	1step reduction			2step reduction					
	1/3	1/5	1/9	1/15	1/20	1/25	1/35	1/45	1/81
50W	B	B	B	B	B	B	B	B	B
100W	B	B	B	B	B	B	B	B	D
200W	B	B	C	C	C	C	C	D	E
400W	C	C	C	C	C	C	D	E	E
750W	C	C	D	D	D	D	E	E	E
1000W	D	D	D	E	E	E	E	E	E
1500W	D	D	D	E	E	E	E	E	E
2000W	D	D	D	E	E	E	E	E	E
2500W	E	E	E	E	E	E	E	E	E
3000W	E	E	E	E	E	E	E	E	E
3500W	E	E	E	E	E	E	E	E	E
4000W	E	E	E	E	E	E	E	E	E
4500W	E	E	E	E	E	E	E	E	E
5000W	E	E	E	E	E	E	E	E	E

Note 1) All corresponding to the gear

■When input speed is 2000rpm

Motor cap.(W) \ Reduction ratio	1step reduction			2step reduction					
	1/3	1/5	1/9	1/15	1/20	1/25	1/35	1/45	1/81
50W	B	B	B	B	B	B	B	C	C
100W	B	B	B	C	C	C	C	D	D
200W	C	C	C	C	C	C	C	D	D
400W	C	C	D	D	D	D	D	D	D
750W	D	D	D	E	E	E	E	E	E
1000W	D	D	D	E	E	E	E	E	E
1500W	D	D	D	E	E	E	E	E	E
2000W	E	E	E	E	E	E	E	E	E
2500W	E	E	E	E	E	E	E	E	E
3000W	E	E	E	E	E	E	E	E	E
3500W	E	E	E	E	E	E	E	E	E

Note 1) All corresponding to the gear

※Torque is limited to the following types:
B type : 1/5 reduction (100W)
C type : 1/81 reduction (50W)
D type : 1/3 reduction (1500W)・1/45 reduction (200W)・1/81 reduction (100W)
E type : 1/3 reduction (3500W)・1/25 reduction (250W)

■About lubricant

- Lubrication: Grease
- Replacement: Not available

Performance Table

<When input speed is 3000rpm>

The same specification applies to all of standard type, LB(low backlash), and PB(high precision type).

Reduction ratio	Type				Output shaft speed	Standard output torque	Instantaneous max. output torque	Permissible radial load	Permissible thrust load	Internal moment of inertia of input shaft conversion	Permissible output torque	Instantaneous max. permissible output torque
	Model	Reduction ratio	Type no.	Motor cap.	(rpm)	(N・m)	(N・m)	(N)	(N)	($\times10^{-4}$kg·m^2)	(N・m)	(N・m)
1/3	VR □ F	-3	B	-50	1000	0.255	0.784	392	196	0.0575	3.43	10.3
	VR □ F	-3	B	-100	1000	0.715	2.06	392	196	0.0575	3.43	10.3
	VR □ F	-3	B	-200	1000	1.47	4.51	392	196	0.135	3.43	10.3
	VR □ F	-3	B	-400	1000	3.43	10.3	392	196	0.145	3.43	10.3
	VR □ F	-3	C	-750	1000	6.37	19.3	784	392	0.913	6.86	20.6
	VR □ F	-3	D	-1000	1000	7.55	22.8	882	441	2.43	18.3	54.9
	VR □ F	-3	D	-1500	1000	12.3	37.1	882	441	2.43	18.3	54.9
	VR □ F	-3	D	-2000	1000	17.2	51.5	882	441	2.43	18.3	54.9
	VR □ F	-3	E	-2500	1000	19.0	57.2	1370	686	5.55	44.1	132
	VR □ F	-3	E	-3000	1000	23.7	71.2	1370	686	5.50	44.1	132
	VR □ F	-3	E	-3500	1000	28.3	85.2	1370	686	5.50	44.1	132
	VR □ F	-3	E	-4000	1000	33.1	99.0	1370	686	5.78	44.1	132
	VR □ F	-3	E	-4500	1000	37.7	113	1370	686	5.78	44.1	132
	VR □ F	-3	E	-5000	1000	42.9	128	1370	686	5.78	44.1	132
1/5	VR □ F	-5	B	-50	600	0.510	1.47	490	245	0.0400	1.57	4.70
	VR □ F	-5	B	-100	600	1.18	3.72	490	245	0.0400	1.57	4.70
	VR □ F	-5	B	-200	600	2.65	8.04	490	245	0.118	2.84	8.53
	VR □ F	-5	C	-400	600	5.39	16.2	980	490	0.363	6.57	19.7
	VR □ F	-5	C	-750	600	10.7	32.1	980	490	0.713	11.5	34.3
	VR □ F	-5	D	-1000	600	13.4	40.5	1080	539	1.85	23.5	70.6
	VR □ F	-5	D	-1500	600	21.5	64.4	1080	539	1.85	23.5	70.6
	VR □ F	-5	E	-2000	600	23.8	71.5	1670	833	3.50	56.8	171
	VR □ F	-5	E	-2500	600	31.8	95.5	1670	833	3.50	56.8	171
	VR □ F	-5	E	-3000	600	39.6	119	1670	833	3.48	56.8	171
	VR □ F	-5	E	-3500	600	47.2	141	1670	833	3.48	56.8	171
	VR □ F	-5	E	-4000	600	55.3	166	1670	833	3.75	56.8	171
1/9	VR □ F	-S9	B	-50	333	0.921	2.74	588	294	0.0350	2.35	7.25
	VR □ F	-S9	B	-100	333	2.25	6.86	588	294	0.0350	2.35	7.25
	VR □ F	-S9	C	-200	333	3.72	11.3	1180	588	0.275	9.70	29.2
	VR □ F	-S9	C	-400	333	9.51	28.5	1180	588	0.275	9.70	29.2
	VR □ F	-S9	D	-750	333	18.2	54.7	1470	735	0.650	18.2	54.7
	VR □ F	-S9	E	-1000	333	20.0	60.1	1960	980	2.81	73.5	221
	VR □ F	-S9	E	-1500	333	34.3	103	1960	980	2.81	73.5	221
	VR □ F	-S9	E	-2000	333	48.6	146	1960	980	2.81	73.5	221
	VR □ F	-S9	E	-2500	333	60.8	182	1960	980	2.81	73.5	221
	VR □ F	-S9	E	-3000	333	73.0	219	1960	980	2.77	73.5	221
1/15	VR □ F	-15	B	-50	200	1.67	5.00	784	392	0.0350	4.02	12.2
	VR □ F	-15	B	-100	200	3.72	11.4	784	392	0.0350	4.02	12.2
	VR □ F	-15	C	-200	200	6.27	18.8	1470	735	0.300	16.2	48.6
	VR □ F	-15	C	-400	200	15.8	47.5	1470	735	0.300	16.2	48.6
	VR □ F	-15	D	-750	200	30.4	91.2	1760	882	0.700	30.4	91.2
	VR □ F	-15	E	-1000	200	33.3	100	2350	1180	2.80	91.4	274
	VR □ F	-15	E	-1500	200	57.2	172	2350	1180	2.80	91.4	274
	VR □ F	-15	E	-2000	200	81.0	243	2350	1180	2.80	91.4	274
1/20	VR □ F	-20	B	-50	150	2.21	6.63	804	402	0.0340	5.00	15.0
	VR □ F	-20	B	-100	150	5.00	15.0	804	402	0.0340	5.00	15.0
	VR □ F	-20	C	-200	150	8.69	26.1	1570	785	0.294	21.1	63.3
	VR □ F	-20	C	-400	150	21.1	63.3	1570	785	0.294	21.1	63.3
	VR □ F	-20	D	-750	150	40.6	122	1910	955	0.690	40.6	122
	VR □ F	-20	E	-1000	150	44.5	134	2500	1250	2.72	78.4	235
1/25	VR □ F	-25	B	-50	120	2.74	8.33	882	441	0.0325	4.02	12.2
	VR □ F	-25	B	-100	120	6.27	19.0	882	441	0.0325	6.27	19.0
	VR □ F	-25	C	-200	120	11.1	33.3	1670	833	0.288	21.7	64.9
	VR □ F	-25	C	-400	120	26.4	79.2	1670	833	0.288	26.4	79.2
	VR □ F	-25	D	-750	120	50.7	152	2060	1030	0.680	50.7	152
	VR □ F	-25	E	-1000	120	55.7	167	2650	1320	2.71	65.4	196
1/35	VR □ F	-35	B	-50	85	3.84	11.5	882	441	0.0300	3.84	11.5
	VR □ F	-35	C	-100	85	7.24	21.7	1670	833	0.0650	13.9	41.7
	VR □ F	-35	C	-200	85	15.5	46.6	1670	833	0.262	15.5	46.6
	VR □ F	-35	D	-400	85	37.0	111	2060	1030	0.269	37.0	111
	VR □ F	-35	E	-750	85	71.0	213	3430	1715	0.473	71.0	213
1/45	VR □ F	-45	C	-50	66	3.86	11.6	1670	833	0.0285	9.50	28.6
	VR □ F	-45	C	-100	66	9.31	28.0	1670	833	0.0285	9.50	28.6
	VR □ F	-45	D	-200	66	21.1	63.5	2060	1030	0.0256	28.3	85.2
	VR □ F	-45	E	-400	66	47.5	142.5	3520	1760	0.245	57.0	171
	VR □ F	-45	E	-750	66	91.3	274	3520	1760	1.77	91.3	274
1/81	VR □ F	-81	C	-50	37	7.02	20.8	1670	833	0.0270	9.70	29.2
	VR □ F	-81	D	-100	37	14.0	42.0	2060	1030	0.0300	17.8	53.5
	VR □ F	-81	E	-200	37	36.1	108.3	3530	1765	0.240	43.3	129.9

Note 1) The moment of inertia of input shaft conversion is only gained from the reducer, so it does not include moment of inertia of the motor.
Note 2) The max. input speed is 5000rpm. Usually set to 3000rpm or less.
Note 3) The permissible radial load is indicated on the center of the output shaft.
Note 4) All numerical values are within the range corresponding to the gear.

Performance Table

<When input speed is 2000rpm>

The same specification applies to all of standard type, LB(low backlash), and PB(high precision type).

Reduction ratio	Type				Output shaft speed	Standard output torque	Instantaneous max. output torque	Permissible radial load	Permissible thrust load	Internal moment of inertia of input shaft conversion	Permissible output torque	Instantaneous max. permissible output torque
	Model	Reduction ratio	Type no.	Motor cap.	(rpm)	(N・m)	(N・m)	(N)	(N)	($\times 10^{-4}$kg·m^2)	(N・m)	(N・m)
1/3	VR □ F	-3	B	-50	666	0.477	1.43	450	225	0.0575	3.43	10.3
	VR □ F	-3	B	-100	666	1.05	3.15	450	225	0.135	3.43	10.3
	VR □ F	-3	B	-200	666	2.48	7.45	450	225	0.145	3.43	10.3
	VR □ F	-3	C	-400	666	5.01	15.0	900	450	0.913	6.86	20.6
	VR □ F	-3	D	-750	666	8.73	26.2	1010	505	2.43	18.3	54.9
	VR □ F	-3	D	-1000	666	12.3	37.1	1010	505	2.43	18.3	54.9
	VR □ F	-3	D	-1500	666	18.3	54.9	1010	505	2.43	18.3	54.9
	VR □ F	-3	E	-2000	666	23.7	71.2	1570	785	5.50	44.1	132
	VR □ F	-3	E	-2500	666	30.8	92.5	1570	785	5.50	44.1	132
	VR □ F	-3	E	-3000	666	37.7	113	1570	785	5.50	44.1	132
	VR □ F	-3	E	-3500	666	44.1	132	1570	785	5.78	44.1	132
1/5	VR □ F	-5	B	-50	400	0.795	2.39	560	280	0.0400	1.57	4.70
	VR □ F	-5	B	-100	400	1.57	4.70	560	280	0.118	1.57	4.70
	VR □ F	-5	C	-200	400	3.82	11.5	1120	560	0.363	6.57	19.7
	VR □ F	-5	C	-400	400	8.35	25.1	1120	560	0.713	11.5	34.3
	VR □ F	-5	D	-750	400	15.5	46.5	1230	615	1.85	23.5	70.6
	VR □ F	-5	D	-1000	400	21.5	64.4	1230	615	1.85	23.5	70.6
	VR □ F	-5	E	-1500	400	27.8	83.5	1900	950	3.50	56.8	171
	VR □ F	-5	E	-2000	400	39.6	119	1900	950	3.48	56.8	171
	VR □ F	-5	E	-2500	400	51.4	154	1900	950	3.75	56.8	171
1/9	VR □ F	-S9	B	-50	222	1.57	4.72	670	335	0.0350	2.35	7.25
	VR □ F	-S9	C	-100	222	2.35	7.04	1340	670	0.275	9.70	29.2
	VR □ F	-S9	C	-200	222	6.64	19.9	1340	670	0.275	9.70	29.2
	VR □ F	-S9	D	-400	222	14.0	41.9	1680	840	0.650	18.2	54.7
	VR □ F	-S9	E	-750	222	23.6	70.9	2240	1120	2.81	73.5	221
	VR □ F	-S9	E	-1000	222	34.3	103	2240	1120	2.81	73.5	221
	VR □ F	-S9	E	-1500	222	53.7	161	2240	1120	2.81	73.5	221
	VR □ F	-S9	E	-2000	222	73.0	219	2240	1120	2.77	73.5	221
1/15	VR □ F	-15	B	-50	133	2.62	7.87	882	441	0.0350	4.02	12.2
	VR □ F	-15	C	-100	133	3.91	11.7	1670	833	0.300	16.2	48.6
	VR □ F	-15	C	-200	133	11.1	33.2	1670	833	0.300	16.2	48.6
	VR □ F	-15	D	-400	133	23.3	69.8	2020	1010	0.700	30.4	91.2
	VR □ F	-15	E	-750	133	39.4	118	2650	1320	2.80	91.4	274
	VR □ F	-15	E	-1000	133	57.2	172	2650	1320	2.80	91.4	274
	VR □ F	-15	E	-1500	133	91.3	274	2650	1320	2.80	91.4	274
1/20	VR □ F	-20	B	-50	100	3.50	10.5	910	455	0.0340	5.00	15.0
	VR □ F	-20	C	-100	100	5.73	17.2	1790	895	0.294	21.1	63.3
	VR □ F	-20	C	-200	100	14.8	44.4	1790	895	0.294	21.1	63.3
	VR □ F	-20	D	-400	100	31.0	93.1	2180	1090	0.690	40.6	122
	VR □ F	-20	E	-750	100	52.4	157	2650	1320	2.72	78.4	235
1/25	VR □ F	-25	B	-50	80.0	4.37	13.1	882	441	0.0325	6.27	19.0
	VR □ F	-25	C	-100	80.0	7.16	21.5	1670	833	0.288	21.7	64.9
	VR □ F	-25	C	-200	80.0	18.5	55.4	1670	833	0.288	21.7	64.9
	VR □ F	-25	D	-400	80.0	38.8	116	2060	1030	0.680	50.7	152
	VR □ F	-25	E	-750	80.0	65.4	196	2650	1320	2.71	65.4	196
1/35	VR □ F	-35	C	-50	57	4.43	13.3	1900	950	0.262	15.5	46.6
	VR □ F	-35	C	-100	57	12.7	38.1	1900	950	0.262	15.5	46.6
	VR □ F	-35	D	-200	57	22.0	66.0	2340	1170	0.269	37.0	111
1/45	VR □ F	-45	C	-50	44.4	5.80	17.4	1670	833	0.0285	9.50	28.6
	VR □ F	-45	D	-100	44.4	14.0	42.1	2060	1030	0.0285	28.3	85.2
	VR □ F	-45	D	-200	44.4	28.3	85.2	2060	1030	0.0285	28.3	85.2
1/81	VR □ F	-81	C	-50	24.6	9.70	29.2	1670	833	0.0270	9.70	29.2
	VR □ F	-81	D	-100	24.6	17.8	53.5	2060	1030	0.0300	17.8	53.5

Note 1) The moment of inertia of input shaft conversion is only gained from the reducer, so it does not include moment of inertia of the motor.
Note 2) The max. input speed is 5000rpm. Usually set to 3000rpm or less.
Note 3) All numerical values are within the range corresponding to the gear.

Dimensional Drawing & Table

<Cylinder type-matched VRSF series>

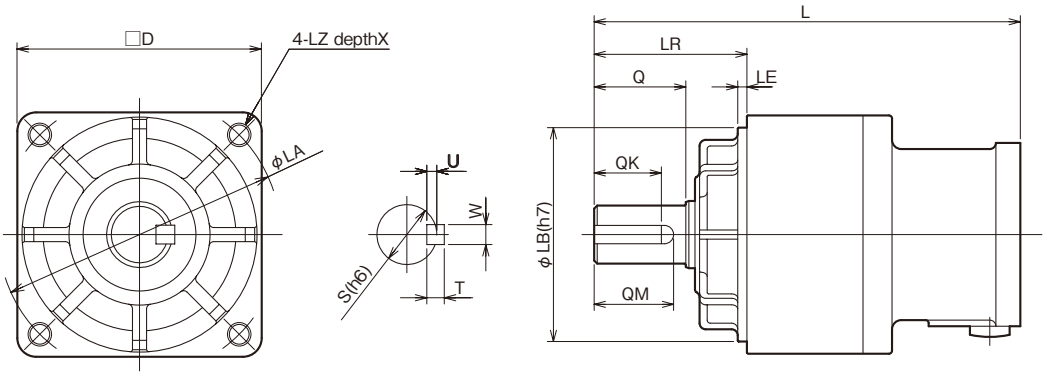

■ Reducer types D and E have the following shape:

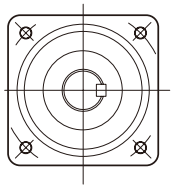

■ Able Reducer coaxial type dimensional table

(Unit: mm)

Type				Total length L			Output shaft							Flange					
Model	Reduction ratio	Type no.	Motor cap.	Panasonic-made MSMA	Yaskawa-made SGMASH SGMSH	Mitsubishi-made HC-KFS HC-RFS	LR	S	Q	QM	QK	W×U	T	D	LB	LE	LA	LZ	X
VRSF	3・5・S9	B	50	99.5			32	12	20	18	16	4×2.5	4	52	50	3	60	M5	12
VRSF	15・20・25・35	B	50	110															
VRSF	3・5・S9	B	100	99.5															
VRSF	15・20・25	B	100	110															
VRSF	3・5	B	200	104.5															
VRSF	3	B	400																
VRSF	45・81	C	50	142			50	19	30	26	22	6×3.5	6	78	70	3	90	M6	20
VRSF	35	C	100	150															
VRSF	45	C	100	142															
VRSF	S9	C	200	139.5															
VRSF	15・20・25・35	C	200	150															
VRSF	5・S9	C	400	139.5															
VRSF	15・20・25	C	400	150															
VRSF	3・5	C	750	143.5															
VRSF	81	D	100	158			61	24	40	35	30	8×4	7	98	90	5	115	M8	20
VRSF	45	D	200	165															
VRSF	35	D	400																
VRSF	S9	D	750	158.5															
VRSF	15・20・25	D	750	171															
VRSF	3・5	D	1000	177															
VRSF	3・5	D	1500																
VRSF	3	D	2000																
VRSF	81	E	200	210			75	32	55	52	45	10×5	8	125	110	5	135	M10	20
VRSF	45	E	400																
VRSF	35	E	750																
VRSF	45	E	750	235															
VRSF	S9	E	1000	215															
VRSF	15・25	E	1000	235															
VRSF	S9	E	1500	215															
VRSF	15	E	1500	235															
VRSF	5・S9	E	2000	215															
VRSF	15	E	2000	235															
VRSF	3・5・S9	E	2500	215	—														
VRSF	3・5・S9	E	3000	215	225	—													
VRSF	3・5	E	3500	215	—	225													
VRSF	3・5	E	4000	225		—													
VRSF	3	E	4500	225	—														
VRSF	3	E	5000	225															

Note 1) If a motor beyond the standard models(motor matching series) is attached, contact us. (How to measure dimensions of the motor-attached flange may be changed in some cases.)
Note 2) Rotation of the output shaft is in the same direction as that of motor input.
Note 3) All numerical values are within the range corresponding to the gear.

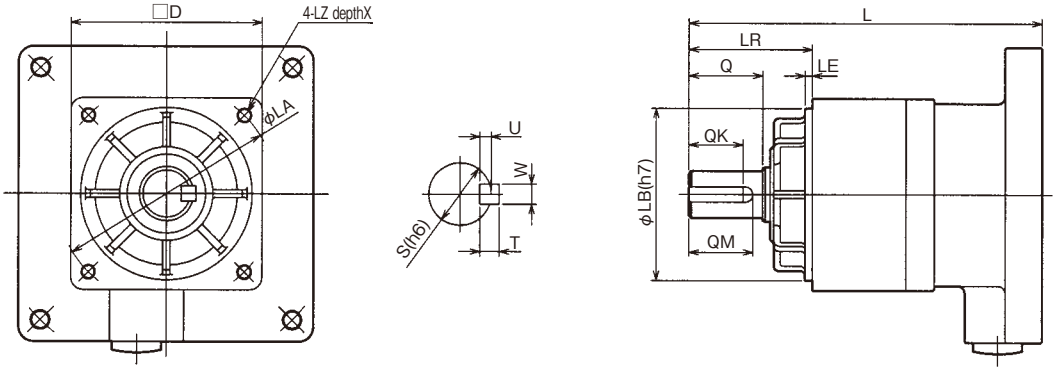

■ Yaskawa-made (SGMPS3000rpm) (SGMP, SGMPH3000rpm)

(Unit mm)

Type				Total length	Output shaft							Flange					
Model	Reduction ratio	Type no.	Motor cap.	L	LR	S	Q	QM	QK	W×U	T	D	LB	LE	LA	LZ	X
VRSF	3・5・S9	B	100	104.5	32	12	20	18	16	4×2.5	4	52	50	3	60	M5	12
VRSF	15・20・25	B	100	110													
VRSF	3・5	B	200	104.5													
VRSF	3	B	400														
VRSF	35	C	100	150	50	19	30	26	22	6×3.5	6	78	70	3	90	M6	20
VRSF	45	C	100	142													
VRSF	S9	C	200	139.5													
VRSF	15・20・25・35	C	200	150													
VRSF	5・S9	C	400	139.5													
VRSF	15・20・25	C	400	150													
VRSF	3・5	C	750	143.5													
VRSF	81	D	100	158	61	24	40	35	30	8×4	7	98	90	5	115	M8	20
VRSF	45	D	200	165													
VRSF	35	D	400														
VRSF	S9	D	750	158.5													
VRSF	15・20・25	D	750	171													
VRSF	3・5	D	1500	177													
VRSF	81	E	200	210	75	32	55	52	45	10×5	8	125	110	5	135	M10	20
VRSF	45	E	400														
VRSF	35	E	750	230													
VRSF	45	E	750	235													
VRSF	S9	E	1500	215													
VRSF	15	E	1500	235													

■ Mitsubishi Electric-made (HC-SFS2000rpm) (HF-SP2000rpm)

(Unit: mm)

Type				Total length	Output shaft							Flange					
Model	Reduction ratio	Type no.	Motor cap.	L	LR	S	Q	QM	QK	W×U	T	D	LB	LE	LA	LZ	X
VRSF	3・5	D	500	177	61	24	40	35	30	8×4	7	98	90	5	115	M8	20
VRSF	S9	D	500	178.5													
VRSF	15・20・25	D	500	191													
VRSF	3・5	D	1000	177													
VRSF	3	D	1500														
VRSF	35	E	500	230	75	32	55	52	45	10×5	8	125	110	5	135	M10	20
VRSF	45	E	500	235													
VRSF	S9	E	1000	215													
VRSF	15	E	1000	235													
VRSF	5・S9	E	1500	215													
VRSF	15	E	1500	235													
VRSF	3・5・S9	E	2000	245													
VRSF	3	E	3500														

Note 1) Rotation of the output shaft is in the same direction as that of motor input.
Note 2) All numerical values are within the range corresponding to the gear.

Dimensional Drawing <50W>

Performance Table <If input speed is 3000rpm>

■Performance Table 50W

If input speed is 3000rpm:

Rated input motor cap.	Reduction ratio	Type				Output shaft speed	Standard output torque	Instantaneous max. output torque	Permissible radial load	Permissible thrust load	Internal moment of inertia of input shaft conversion	Permissible output torque	Instantaneous max. permissible output torque
		Model	Reduction ratio	Type no.	Motor cap.	(rpm)	(N・m)	(N・m)	(N)	(N)	(10^{-4}×kg·m^2)	(N・m)	(N・m)
50W	1/3	VRSF	3	B	50	1000	0.255	0.784	392	196	0.0575	3.43	10.3
	1/5	VRSF	5	B	50	600	0.510	1.47	490	245	0.0400	1.57	4.70
	1/9	VRSF	S9	B	50	333	0.921	2.74	588	294	0.0350	2.35	7.25
	1/15	VRSF	15	B	50	200	1.67	5.00	784	392	0.0350	4.02	12.2
	1/20	VRSF	20	B	50	150	2.21	6.63	804	402	0.0340	5.00	15.0
	1/25	VRSF	25	B	50	120	2.74	8.33	882	441	0.0325	4.02	12.2
	1/35	VRSF	35	B	50	85	3.84	11.5	882	441	0.0300	3.84	11.5
	1/45	VRSF	45	C	50	66	3.86	11.6	1670	833	0.0285	9.50	28.6
	1/81	VRSF	81	C	50	37	7.02	20.8	1670	833	0.0270	9.70	29.2

Note 1) In case of attachment to a motor beyond the standard models(motor matching series), contact us.(How to measure dimensions of the flange may be changed in some cases.)
Note 2) The moment of inertia of input shaft conversion is only gained from the reducer, so it does not include moment of inertia of the motor.
Note 3) The max. input speed is 5000rpm, and usually set to 3000rpm or less.
Note 4) The permissible radial load is indicated on the center of the output shaft.
Note 5) All numerical values are within the range corresponding to the gear.
Note 6) For motor attachment procedure, see VR38 page.
Note 7) Rotation of the output shaft is in the same direction as that of motor input.

VRSF-3B・5B・S9B-50

■Rough weight 0.55kg ■CAD data no.<VSB1A5□1>

P : TYPE1
Y : TYPE2
M : TYPE3

For details of TYPE1~3, see VR31 page.

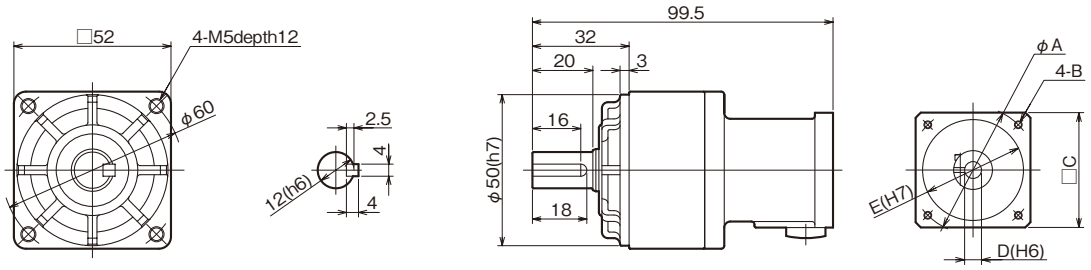

■ Detailed flange dimensions table (Unit mm)

Motor type	A	B	C	D	E
TYPE1	45	M3	38	8	30
TYPE2	46	M4	40	6	30
TYPE3	46	M4	40	8	30

※CAD data can be downloaded in the homepage.

VRSF-15B・20B・25B・35B-50

■Rough weight 0.7kg ■CAD data no.<VSB2A5□1>

P : TYPE1
Y : TYPE2
M : TYPE3

For details of TYPE1~3, see VR31 page.

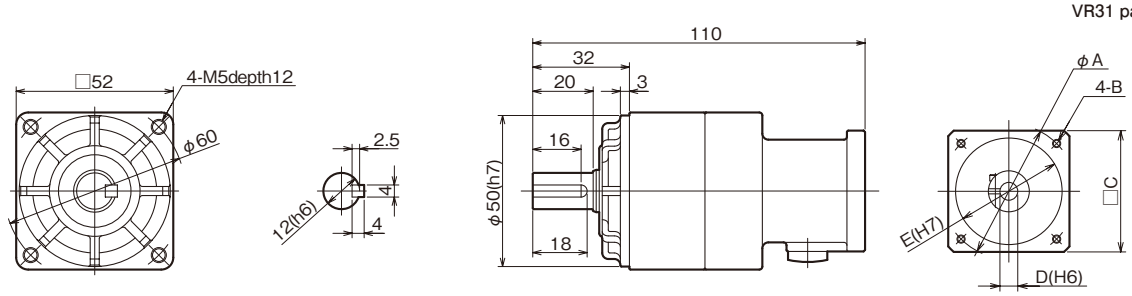

■ Detailed flange dimensions table (Unit mm)

Motor type	A	B	C	D	E
TYPE1	45	M3	38	8	30
TYPE2	46	M4	40	6	30
TYPE3	46	M4	40	8	30

※CAD data can be downloaded in the homepage.

VRSF-45C・81C-50

■Rough weight 1.7kg ■CAD data no.<VSC2A5□1>

P : TYPE1
Y : TYPE2
M : TYPE3

For details of TYPE1~3, see VR31 page.

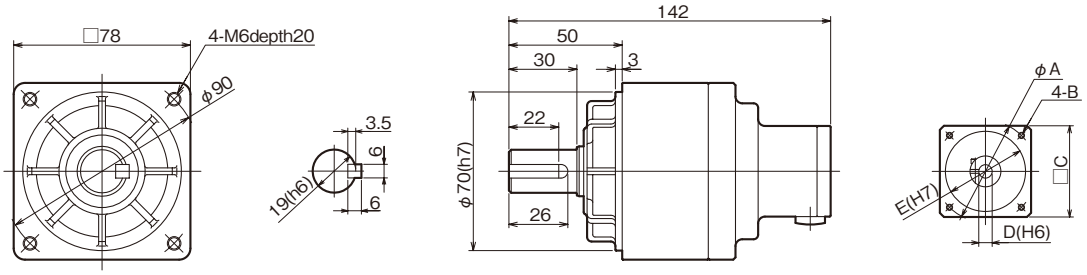

■ Detailed flange dimensions table (Unit mm)

Motor type	A	B	C	D	E
TYPE1	45	M3	38	8	30
TYPE2	46	M4	40	6	30
TYPE3	46	M4	40	8	30

※CAD data can be downloaded in the homepage.

Dimensional Drawing <100W>

Performance Table <If input speed is 3000rpm>

■Performance Table 100W

If input speed is 3000rpm:

Rated input motor cap.	Reduction ratio	Type				Output shaft speed	Standard output torque	Instantaneous max. output torque	Permissible radial load	Permissible thrust load	Internal moment of inertia of input shaft conversion	Permissible output torque	Instantaneous max. permissible output torque
		Model	Reduction ratio	Type no.	Motor cap.	(rpm)	(N・m)	(N・m)	(N)	(N)	(10^{-4}×kg·m^2)	(N・m)	(N・m)
100W	1/3	VRSF	3	B	100	1000	0.715	2.06	392	196	0.0575	3.43	10.3
	1/5	VRSF	5	B	100	600	1.18	3.72	490	245	0.0400	1.57	4.70
	1/9	VRSF	S9	B	100	333	2.25	6.86	588	294	0.0350	2.35	7.25
	1/15	VRSF	15	B	100	200	3.72	11.4	784	392	0.0350	4.02	12.2
	1/20	VRSF	20	B	100	150	5.00	15.0	804	402	0.0340	5.00	15.0
	1/25	VRSF	25	B	100	120	6.27	19.0	882	441	0.0325	6.27	19.0
	1/35	VRSF	35	C	100	85	7.24	21.7	1670	833	0.0650	13.9	41.7
	1/45	VRSF	45	C	100	66	9.31	28.0	1670	833	0.0285	9.50	28.6
	1/81	VRSF	81	D	100	37	14.0	42.0	2060	1030	0.0300	17.8	53.5

Note 1) In case of attachment to a motor beyond the standard models(motor matching series), contact us.(How to measure dimensions of the flange may be changed in some cases.)
Note 2) The moment of inertia of input shaft conversion is only gained from the reducer, so it does not include moment of inertia of the motor.
Note 3) The max. input speed is 5000rpm, and usually set to 3000rpm or less.
Note 4) The permissible radial load is indicated on the center of the output shaft.
Note 5) All numerical values are within the range corresponding to the gear.
Note 6) For motor attachment procedure, see VR38 page.
Note 7) Rotation of the output shaft is in the same direction as that of motor input.

VRSF-3B・5B・S9B-100

■Rough weight 0.55kg ■CAD data no.<VSB101□1>

P : TYPE1
Y : TYPE2
M : TYPE3

For details of TYPE1~3, see VR31 page.

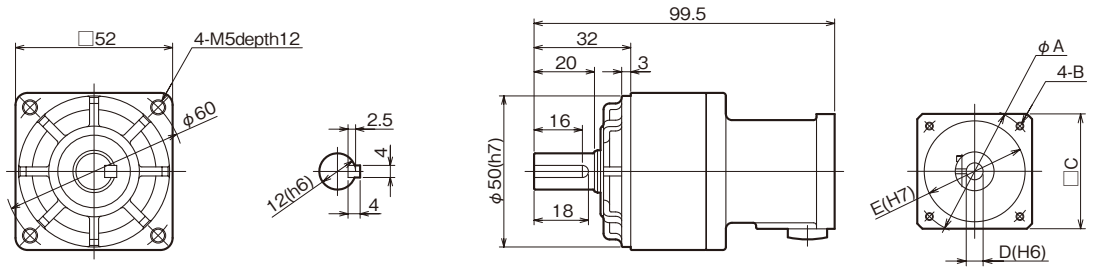

■ Detailed flange dimensions table (Unit mm)

Motor type	A	B	C	D	E
TYPE1	45	M3	38	8	30
TYPE2	46	M4	40	8	30
TYPE3	46	M4	40	8	30

※CAD data can be downloaded in the homepage.

VRSF-15B・20B・25B-100

■Rough weight 0.7kg ■CAD data no.<VSB201□1>

P : TYPE1
Y : TYPE2
M : TYPE3

For details of TYPE1~3, see VR31 page.

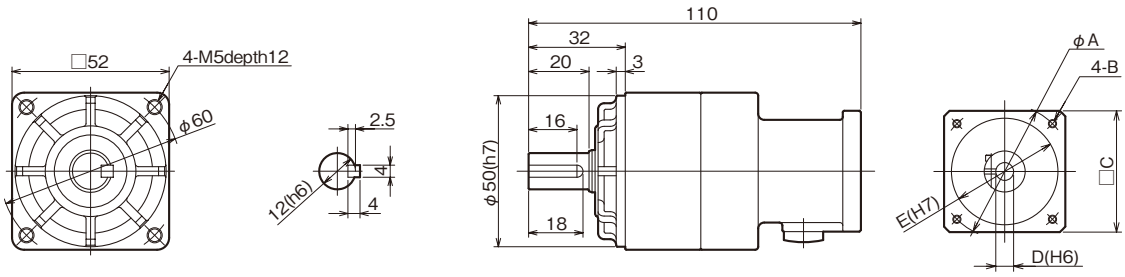

■ Detailed flange dimensions table (Unit mm)

Motor type	A	B	C	D	E
TYPE1	45	M3	38	8	30
TYPE2	46	M4	40	8	30
TYPE3	46	M4	40	8	30

※CAD data can be downloaded in the homepage.

VRSF-35C-100

■Rough weight 2.0kg ■CAD data no.<VSC201□1S>

P : TYPE1
Y : TYPE2
M : TYPE3

For details of TYPE1~3, see VR31 page.

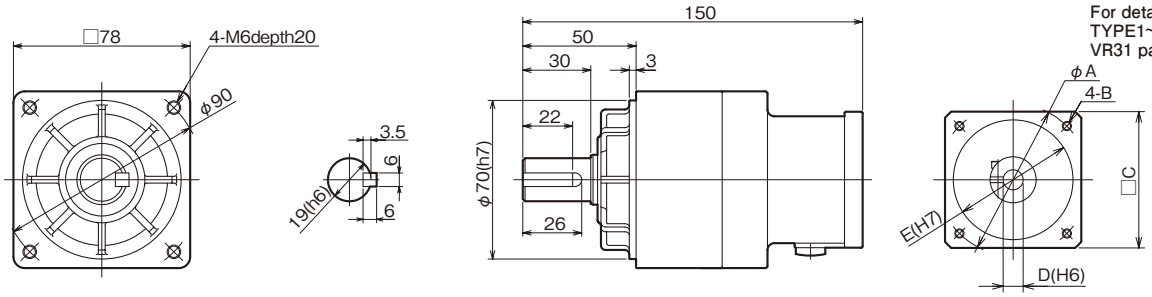

■ Detailed flange dimensions table (Unit mm)

Motor type	A	B	C	D	E
TYPE1	45	M3	38	8	30
TYPE2	46	M4	40	8	30
TYPE3	46	M4	40	8	30

※CAD data can be downloaded in the homepage.

VRSF-45C-100

■Rough weight 1.7kg ■CAD data no.<VSC201□1>

P : TYPE1
Y : TYPE2
M : TYPE3

For details of TYPE1~3, see VR31 page.

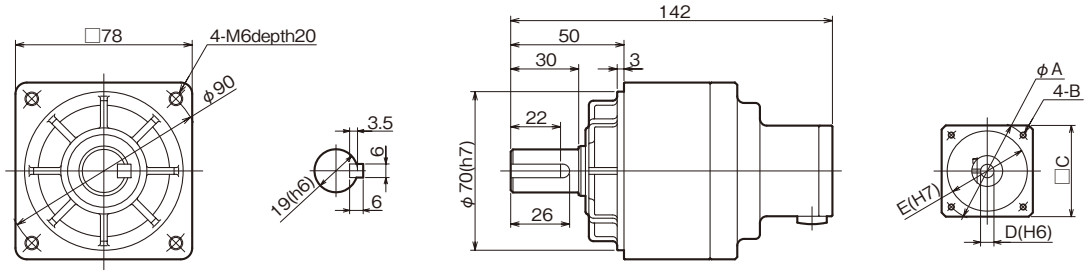

■ Detailed flange dimensions table (Unit mm)

Motor type	A	B	C	D	E
TYPE1	45	M3	38	8	30
TYPE2	46	M4	40	8	30
TYPE3	46	M4	40	8	30

※CAD data can be downloaded in the homepage.

VRSF-81D-100

■Rough weight 3.0kg ■CAD data no.<VSD201□1>

P : TYPE1
Y : TYPE2
M : TYPE3

For details of TYPE1~3, see VR31 page.

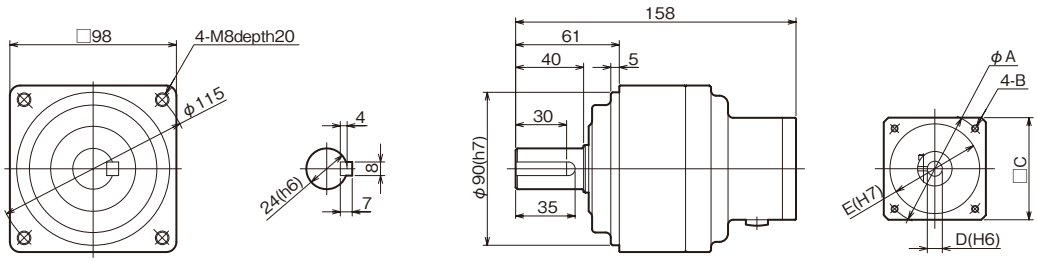

■ Detailed flange dimensions table (Unit mm)

Motor type	A	B	C	D	E
TYPE1	45	M3	38	8	30
TYPE2	46	M4	40	8	30
TYPE3	46	M4	40	8	30

※CAD data can be downloaded in the homepage.

Dimensional Drawing <200W>

Performance Table <If input speed is 3000rpm>

■Performance Table 200W

If input speed is 3000rpm:

Rated input motor cap.	Reduction ratio	Type				Output shaft speed	Standard output torque	Instantaneous max. output torque	Permissible radial load	Permissible thrust load	Internal moment of inertia of input shaft conversion	Permissible output torque	Instantaneous max. permissible output torque
		Model	Reduction ratio	Type no.	Motor cap.	(rpm)	(N・m)	(N・m)	(N)	(N)	(10^{-4}×kg·m^2)	(N・m)	(N・m)
200W	1/3	VRSF	3	B	200	1000	1.47	4.51	392	196	0.135	3.43	10.3
	1/5	VRSF	5	B	200	600	2.65	8.04	490	245	0.118	2.84	8.53
	1/9	VRSF	S9	C	200	333	3.72	11.3	1180	588	0.275	9.70	29.2
	1/15	VRSF	15	C	200	200	6.27	18.8	1470	735	0.300	16.2	48.6
	1/20	VRSF	20	C	200	150	8.69	26.1	1570	785	0.294	21.1	63.3
	1/25	VRSF	25	C	200	120	11.1	33.3	1670	833	0.288	21.7	64.9
	1/35	VRSF	35	C	200	85	15.5	46.6	1670	833	0.262	15.5	46.6
	1/45	VRSF	45	D	200	66	21.1	63.5	2060	1030	0.0256	28.3	85.2
	1/81	VRSF	81	E	200	37	36.1	108.3	3530	1765	0.240	43.3	129.9

Note 1) In case of attachment to a motor beyond the standard models(motor matching series), contact us.(How to measure dimensions of the flange may be changed in some cases.)
Note 2) The moment of inertia of input shaft conversion is only gained from the reducer, so it does not include moment of inertia of the motor.
Note 3) The max. input speed is 5000rpm, and usually set to 3000rpm or less.
Note 4) The permissible radial load is indicated on the center of the output shaft.
Note 5) All numerical values are within the range corresponding to the gear.
Note 6) For motor attachment procedure, see VR38 page.
Note 7) Rotation of the output shaft is in the same direction as that of motor input.

VRSF-3B・5B-200

■Rough weight 0.72kg ■CAD data no.<VSB102□1>

P : TYPE1
Y : TYPE2
M : TYPE3

For details of TYPE1~3, see VR31 page.

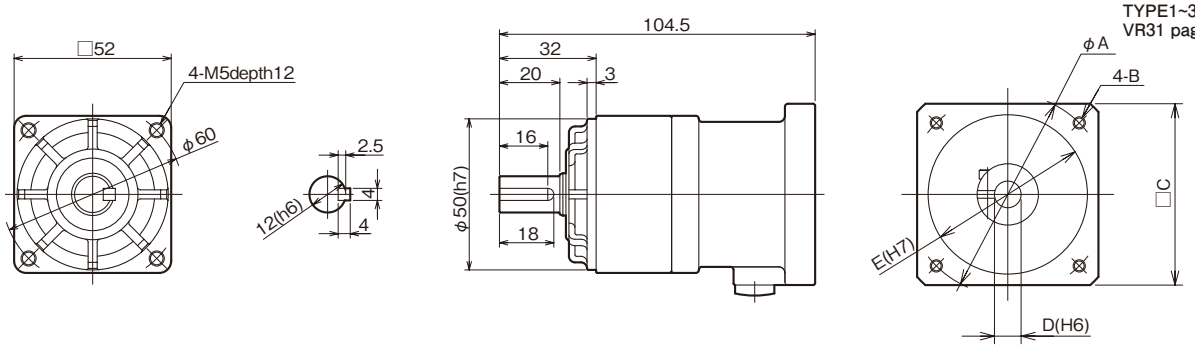

■ Detailed flange dimensions table (Unit mm)

Motor type	A	B	C	D	E
TYPE1	70	M4	60	11	50
TYPE2	70	M5	60	14	50
TYPE3	70	M5	60	14	50

※CAD data can be downloaded in the homepage.

VRSF-S9C-200

■Rough weight 1.7kg ■CAD data no.<VSC102□1>

P : TYPE1
Y : TYPE2
M : TYPE3

For details of TYPE1~3, see VR31 page.

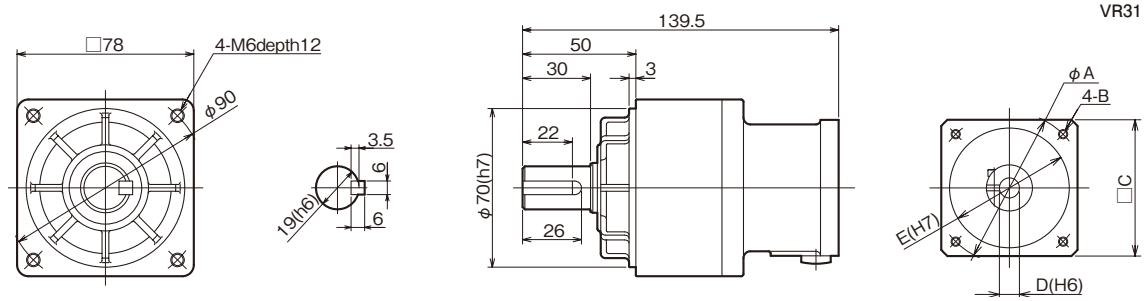

■ Detailed flange dimensions table (Unit mm)

Motor type	A	B	C	D	E
TYPE1	70	M4	60	11	50
TYPE2	70	M5	60	14	50
TYPE3	70	M5	60	14	50

※CAD data can be downloaded in the homepage.

VRSF-15C・20C・25C・35C-200

■Rough weight 2.1kg ■CAD data no.<VSC202□1>

P : TYPE1
Y : TYPE2
M : TYPE3

For details of TYPE1~3, see VR31 page.

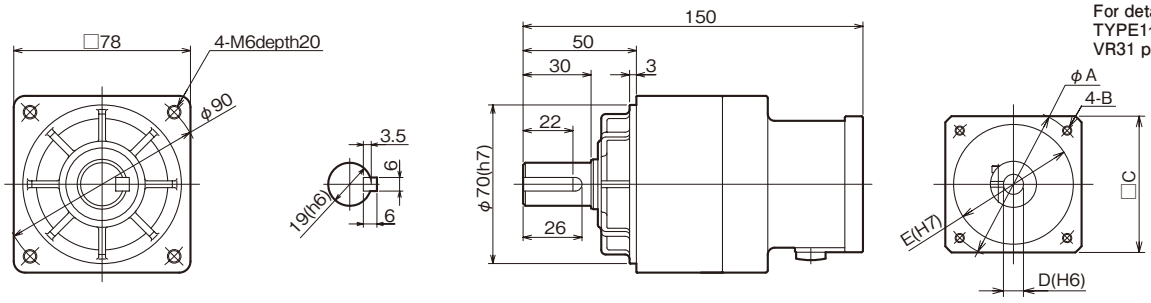

■ Detailed flange dimensions table (Unit mm)

Motor type	A	B	C	D	E
TYPE1	70	M4	60	11	50
TYPE2	70	M5	60	14	50
TYPE3	70	M5	60	14	50

※CAD data can be downloaded in the homepage.

VRSF-45D-200

■Rough weight 3.2kg ■CAD data no.<VSD202□1>

P : TYPE1
Y : TYPE2
M : TYPE3

For details of TYPE1~3, see VR31 page.

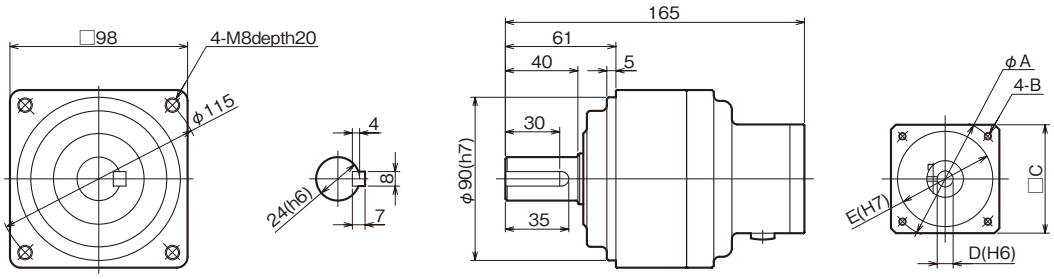

■ Detailed flange dimensions table (Unit mm)

Motor type	A	B	C	D	E
TYPE1	70	M4	60	11	50
TYPE2	70	M5	60	14	50
TYPE3	70	M5	60	14	50

※CAD data can be downloaded in the homepage.

VRSF-81E-200

■Rough weight 7.2kg ■CAD data no.<VSE202□1>

P : TYPE1
Y : TYPE2
M : TYPE3

For details of TYPE1~3, see VR31 page.

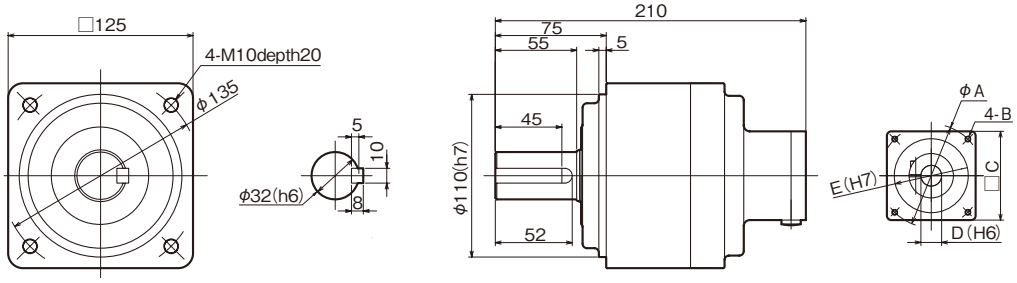

■ Detailed flange dimensions table (Unit mm)

Motor type	A	B	C	D	E
TYPE1	70	M4	60	11	50
TYPE2	70	M5	60	14	50
TYPE3	70	M5	60	14	50

※CAD data can be downloaded in the homepage.

Dimensional Drawing <400W>

Performance Table <If input speed is 3000rpm>

■Performance Table 400W

If input speed is 3000rpm:

Rated input motor cap.	Reduction ratio	Type				Output shaft speed	Standard output torque	Instantaneous max. output torque	Permissible radial load	Permissible thrust load	Internal moment of inertia of input shaft conversion	Permissible output torque	Instantaneous max. permissible output torque
		Model	Reduction ratio	Type no.	Motor cap.	(rpm)	(N・m)	(N・m)	(N)	(N)	(10^{-4}×kg·m^2)	(N・m)	(N・m)
400W	1/3	VRSF	3	B	400	1000	3.43	10.3	392	196	0.145	3.43	10.3
	1/5	VRSF	5	C	400	600	5.39	16.2	980	490	0.363	6.57	19.7
	1/9	VRSF	S9	C	400	333	9.51	28.5	1180	588	0.275	9.70	29.2
	1/15	VRSF	15	C	400	200	15.8	47.5	1470	735	0.300	16.2	48.6
	1/20	VRSF	20	C	400	150	21.1	63.3	1570	785	0.294	21.1	63.3
	1/25	VRSF	25	C	400	120	26.4	79.2	1670	833	0.288	26.4	79.2
	1/35	VRSF	35	D	400	85	37.0	111	2060	1030	0.269	37.0	111
	1/45	VRSF	45	E	400	66	47.5	142.5	3520	1760	0.245	57	171

Note 1) In case of attachment to a motor beyond the standard models(motor matching series), contact us.(How to measure dimensions of the flange may be changed in some cases.)
Note 2) The moment of inertia of input shaft conversion is only gained from the reducer, so it does not include moment of inertia of the motor.
Note 3) The max. input speed is 5000rpm, and usually set to 3000rpm or less.
Note 4) The permissible radial load is indicated on the center of the output shaft.
Note 5) All numerical values are within the range corresponding to the gear.
Note 6) For motor attachment procedure, see VR38 page.
Note 7) Rotation of the output shaft is in the same direction as that of motor input.

VRSF-3B-400

■Rough weight 0.71kg ■CAD data no.<VSB104□1>

P : TYPE1
Y : TYPE2
M : TYPE3

For details of TYPE1~3, see VR31 page.

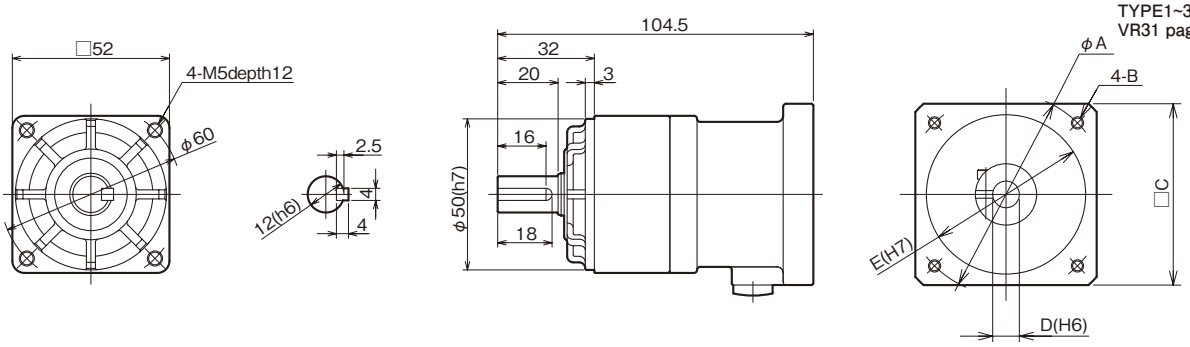

■ Detailed flange dimensions table (Unit mm)

Motor type	A	B	C	D	E
TYPE1	70	M4	60	14	50
TYPE2	70	M5	60	14	50
TYPE3	70	M5	60	14	50

※CAD data can be downloaded in the homepage.

VRSF-5C・S9C-400

■Rough weight 1.7kg ■CAD data no.<VSC104□1>

P : TYPE1
Y : TYPE2
M : TYPE3

For details of TYPE1~3, see VR31 page.

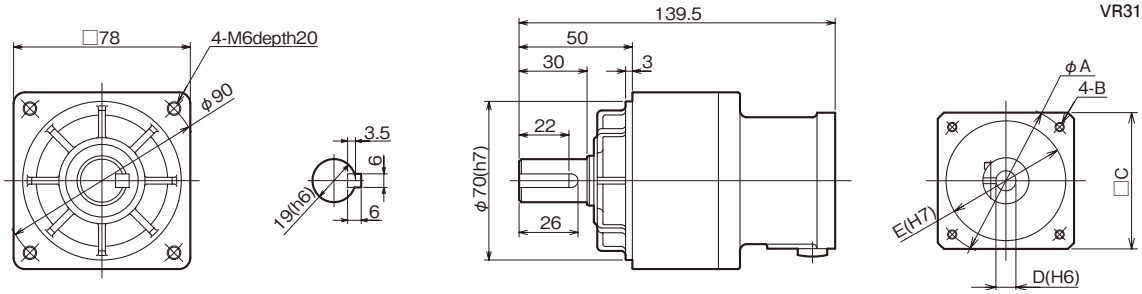

■ Detailed flange dimensions table (Unit mm)

Motor type	A	B	C	D	E
TYPE1	70	M4	60	14	50
TYPE2	70	M5	60	14	50
TYPE3	70	M5	60	14	50

※CAD data can be downloaded in the homepage.

VRSF-15C・20C・25C-400

■Rough weight 2.1kg ■CAD data no.<VSC204□1>

P : TYPE1
Y : TYPE2
M : TYPE3

For details of TYPE1~3, see VR31 page.

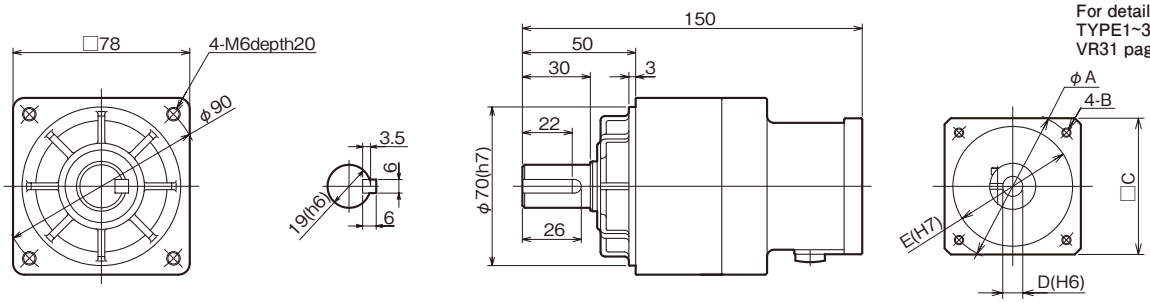

■ Detailed flange dimensions table (Unit mm)

Motor type	A	B	C	D	E
TYPE1	70	M4	60	14	50
TYPE2	70	M5	60	14	50
TYPE3	70	M5	60	14	50

※CAD data can be downloaded in the homepage.

VRSF-35D-400

■Rough weight 3.2kg ■CAD data no.<VSD204□1>

P : TYPE1
Y : TYPE2
M : TYPE3

For details of TYPE1~3, see VR31 page.

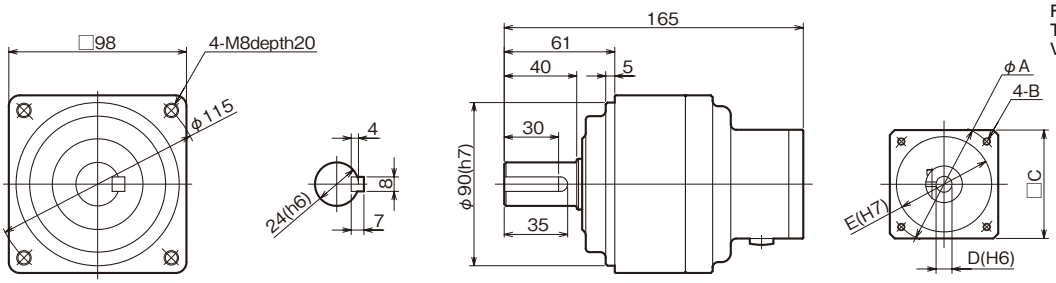

■ Detailed flange dimensions table (Unit mm)

Motor type	A	B	C	D	E
TYPE1	70	M4	60	14	50
TYPE2	70	M5	60	14	50
TYPE3	70	M5	60	14	50

※CAD data can be downloaded in the homepage.

VRSF-45E-400

■Rough weight 7.2kg ■CAD data no.<VSE204□1>

P : TYPE1
Y : TYPE2
M : TYPE3

For details of TYPE1~3, see VR31 page.

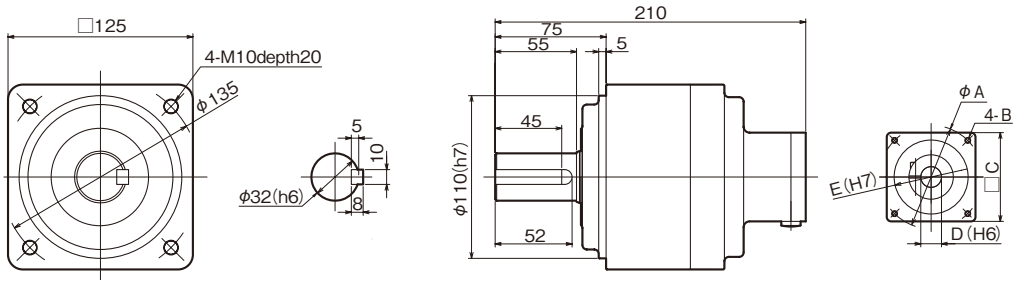

■ Detailed flange dimensions table (Unit mm)

Motor type	A	B	C	D	E
TYPE1	70	M4	60	14	50
TYPE2	70	M5	60	14	50
TYPE3	70	M5	60	14	50

※CAD data can be downloaded in the homepage.

Dimensional Drawing <750W>

Performance Table <If input speed is 3000rpm>

■Performance Table 750W

If input speed is 3000rpm:

Rated input motor cap.	Reduction ratio	Type				Output shaft speed	Standard output torque	Instantaneous max. output torque	Permissible radial load	Permissible thrust load	Internal moment of inertia of input shaft conversion	Permissible output torque	Instantaneous max. permissible output torque
		Model	Reduction ratio	Type no.	Motor cap.	(rpm)	(N・m)	(N・m)	(N)	(N)	(10^{-4}×kg·m^2)	(N・m)	(N・m)
750W	1/3	VRSF	3	C	750	1000	6.37	19.3	784	392	0.913	6.86	20.6
	1/5	VRSF	5	C	750	600	10.7	32.1	980	490	0.713	11.5	34.3
	1/9	VRSF	S9	D	750	333	18.2	54.7	1470	735	0.650	18.2	54.7
	1/15	VRSF	15	D	750	200	30.4	91.2	1760	882	0.700	30.4	91.2
	1/20	VRSF	20	D	750	150	40.6	122	1910	955	0.690	40.6	122
	1/25	VRSF	25	D	750	120	50.7	152	2060	1030	0.680	50.7	152
	1/35	VRSF	35	E	750	85	71.0	213	3430	1715	0.473	71.0	213
	1/45	VRSF	45	E	750	66	91.3	274	3520	1760	1.77	91.3	274

Note 1) In case of attachment to a motor beyond the standard models(motor matching series), contact us.(How to measure dimensions of the flange may be changed in some cases.)
Note 2) The moment of inertia of input shaft conversion is only gained from the reducer, so it does not include moment of inertia of the motor.
Note 3) The max. input speed is 5000rpm, and usually set to 3000rpm or less.
Note 4) The permissible radial load is indicated on the center of the output shaft.
Note 5) All numerical values are within the range corresponding to the gear.
Note 6) For motor attachment procedure, see VR38 page.
Note 7) Rotation of the output shaft is in the same direction as that of motor input.

VRSF-3C・5C-750

■Rough weight 2.1kg ■CAD data no.<VSC108□1>

P : TYPE1
Y : TYPE2
M : TYPE3

For details of TYPE1~3, see VR31 page.

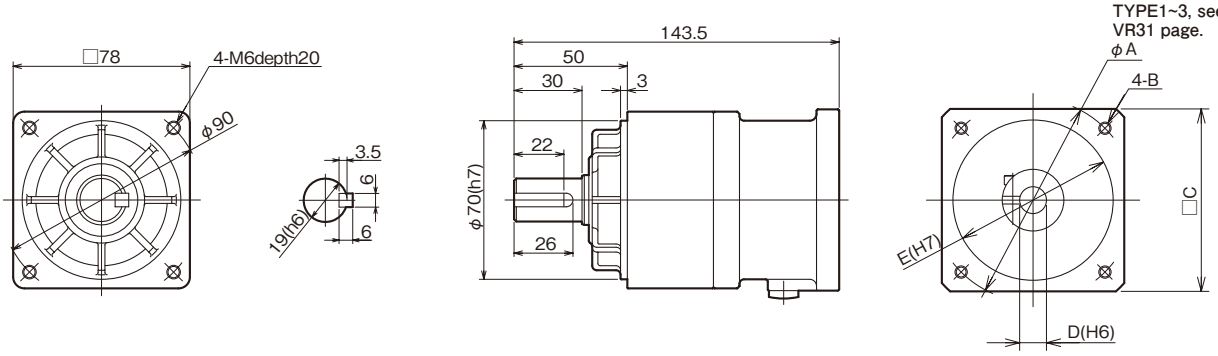

■ Detailed flange dimensions table (Unit mm)

Motor type	A	B	C	D	E
TYPE1	90	M5	80	19	70
TYPE2	90	M6	80	16	70
TYPE3	90	M6	80	19	70

※CAD data can be downloaded in the homepage.

VRSF-S9D-750

■Rough weight 3.4kg ■CAD data no.<VSD108□1>

P : TYPE1
Y : TYPE2
M : TYPE3

For details of TYPE1~3, see VR31 page.

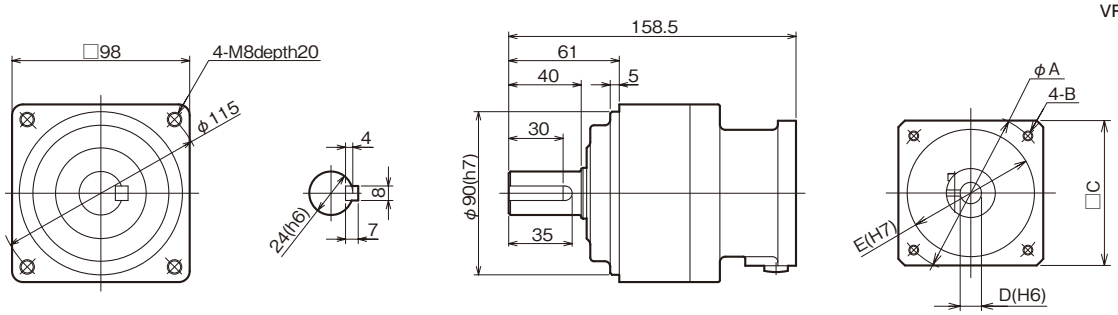

■ Detailed flange dimensions table (Unit mm)

Motor type	A	B	C	D	E
TYPE1	90	M5	80	19	70
TYPE2	90	M6	80	16	70
TYPE3	90	M6	80	19	70

※CAD data can be downloaded in the homepage.

VRSF-15D・20D・25D-750

■Rough weight 3.8kg ■CAD data no.<VSD208□1>

P : TYPE1
Y : TYPE2
M : TYPE3

For details of TYPE1~3, see VR31 page.

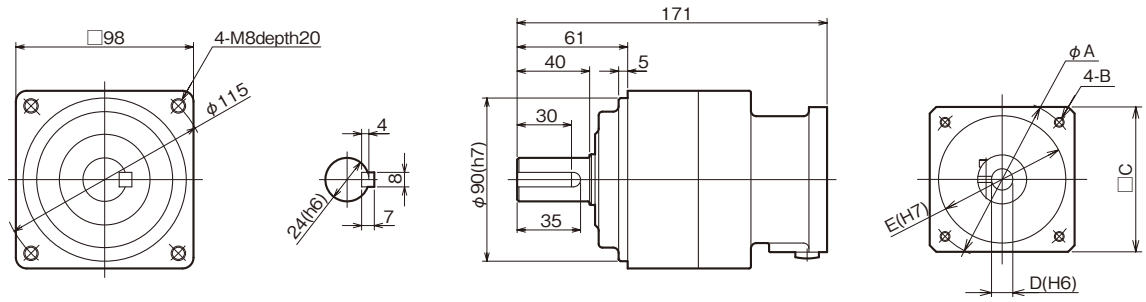

■ Detailed flange dimensions table (Unit mm)

Motor type	A	B	C	D	E
TYPE1	90	M5	80	19	70
TYPE2	90	M6	80	16	70
TYPE3	90	M6	80	19	70

※CAD data can be downloaded in the homepage.

VRSF-35E-750

■Rough weight 7.2kg ■CAD data no.<VSE208□1>

P : TYPE1
Y : TYPE2
M : TYPE3

For details of TYPE1~3, see VR31 page.

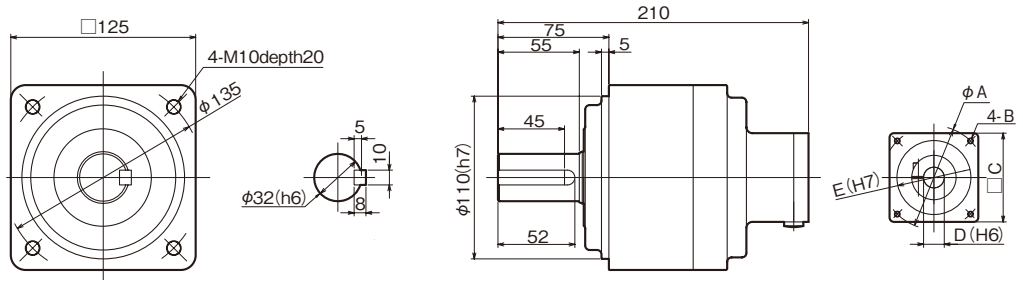

■ Detailed flange dimensions table (Unit mm)

Motor type	A	B	C	D	E
TYPE1	90	M5	80	19	70
TYPE2	90	M6	80	16	70
TYPE3	90	M6	80	19	70

※CAD data can be downloaded in the homepage.

VRSF-45E-750

■Rough weight 12.0kg ■CAD data no.<VSE208□1S>

P : TYPE1
Y : TYPE2
M : TYPE3

For details of TYPE1~3, see VR31 page.

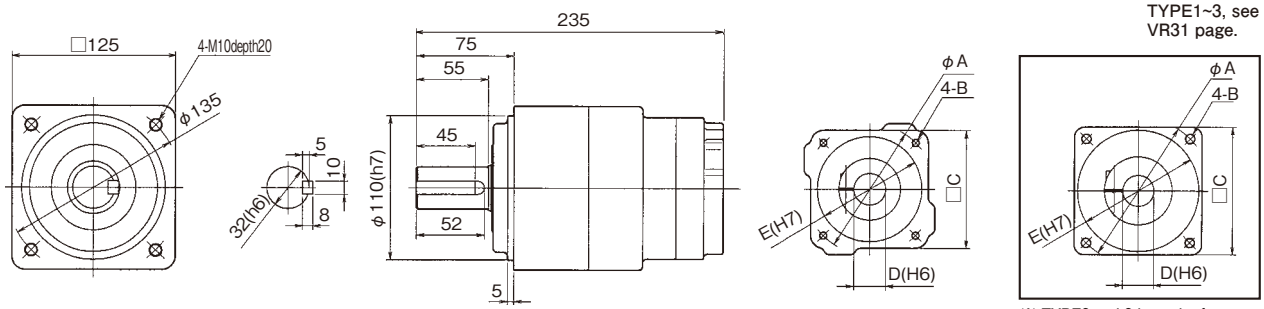

※ TYPE2 and 3 have the form as shown in the above figure.

■ Detailed flange dimensions table (Unit mm)

Motor type	A	B	C	D	E
TYPE1	90	M5	80	19	70
TYPE2	90	M6	80	16	70
TYPE3	90	M6	80	19	70

※CAD data can be downloaded in the homepage.

Dimensional Drawing <1000W>

Performance Table <If input speed is 3000rpm>

■Performance Table 1000W

If input speed is 3000rpm:

Rated input motor cap.	Reduction ratio	Type				Output shaft speed	Standard output torque	Instantaneous max. output torque	Permissible radial load	Permissible thrust load	Internal moment of inertia of input shaft conversion	Permissible output torque	Instantaneous max. permissible output torque
		Model	Reduction ratio	Type no.	Motor cap.	(rpm)	(N・m)	(N・m)	(N)	(N)	(10^{-4}×kg·m^2)	(N・m)	(N・m)
1000W	1/3	VRSF	3	D	1000	1000	7.55	22.8	882	441	2.43	18.3	54.9
	1/5	VRSF	5	D	1000	600	13.4	40.5	1080	539	1.85	23.5	70.6
	1/9	VRSF	S9	E	1000	333	20.0	60.1	1960	980	2.81	73.5	221
	1/15	VRSF	15	E	1000	200	33.3	100	2350	1180	1.95	91.4	274
	1/25	VRSF	25	E	1000	120	55.7	167	2650	1320	1.88	65.4	196

Note 1) In case of attachment to a motor beyond the standard models(motor matching series), contact us.(How to measure dimensions of the flange may be changed in some cases.)
Note 2) The moment of inertia of input shaft conversion is only gained from the reducer, so it does not include moment of inertia of the motor.
Note 3) The max. input speed is 5000rpm, and usually set to 3000rpm or less.
Note 4) The permissible radial load is indicated on the center of the output shaft.
Note 5) All numerical values are within the range corresponding to the gear.
Note 6) For motor attachment procedure, see VR38 page.
Note 7) Rotation of the output shaft is in the same direction as that of motor input.

VRSF-3D・5D-1000

■Rough weight 3.9kg ■CAD data no.<VSD110□1>

P : TYPE1
Y : TYPE2
M : TYPE3

For details of TYPE1~3, see VR32 page.

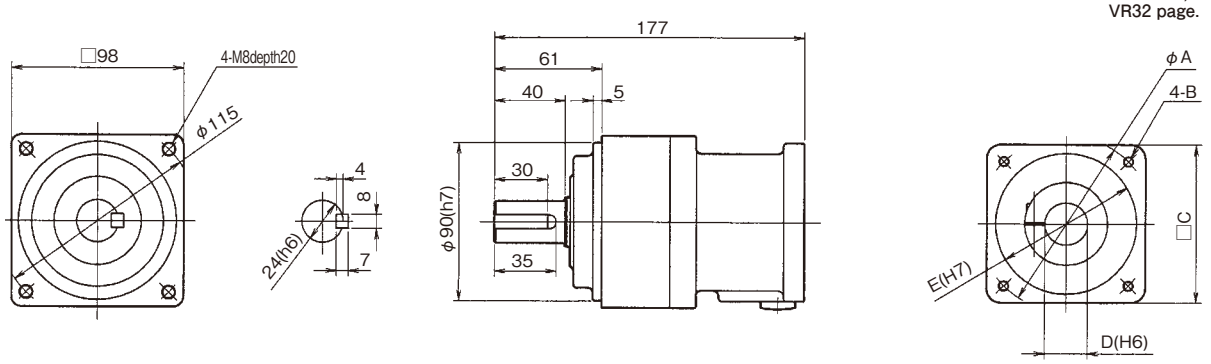

■ Detailed flange dimensions table (Unit mm)

Motor type	A	B	C	D	E
TYPE1	100	M6	90	19	80
TYPE2	115	M6	100	24	95
TYPE3	115	M8	100	24	95

※CAD data can be downloaded in the homepage.

VRSF-S9E-1000

■Rough weight 11kg ■CAD data no.<VSE110□1>

P : TYPE1
Y : TYPE2
M : TYPE3

For details of TYPE1~3, see VR32 page.

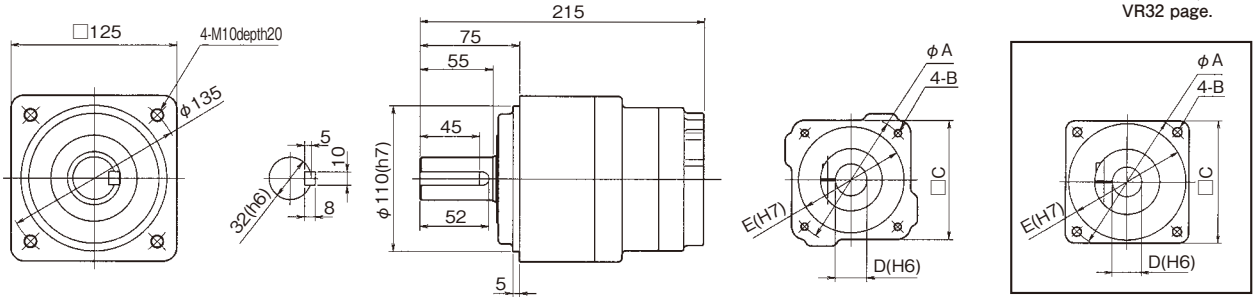

※ TYPE2 and 3 have the form as shown in the above figure.

■ Detailed flange dimensions table (Unit mm)

Motor type	A	B	C	D	E
TYPE1	100	M6	90	19	80
TYPE2	115	M6	100	24	95
TYPE3	115	M8	100	24	95

※CAD data can be downloaded in the homepage.

VRSF-15E・25E-1000

■Rough weight 12kg ■CAD data no.<VSE210□1>

P : TYPE1
Y : TYPE2
M : TYPE3

For details of TYPE1~3, see VR32 page.

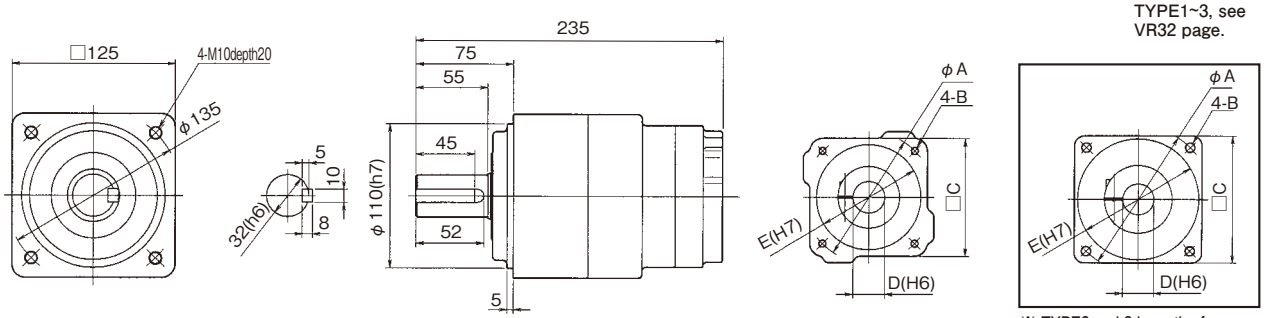

※ TYPE2 and 3 have the form as shown in the above figure.

■ Detailed flange dimensions table (Unit mm)

Motor type	A	B	C	D	E
TYPE1	100	M6	90	19	80
TYPE2	115	M6	100	24	95
TYPE3	115	M8	100	24	95

※CAD data can be downloaded in the homepage.

Dimensional Drawing <1500W>

Performance Table <If input speed is 3000rpm>

■Performance Table 1500W

If input speed is 3000rpm:

Rated input motor cap.	Reduction ratio	Type				Output shaft speed	Standard output torque	Instantaneous max. output torque	Permissible radial load	Permissible thrust load	Internal moment of inertia of input shaft conversion	Permissible output torque	Instantaneous max. permissible output torque
		Model	Reduction ratio	Type no.	Motor cap.	(rpm)	(N・m)	(N・m)	(N)	(N)	(10^{-4}×kg·m^2)	(N・m)	(N・m)
1500W	1/3	VRSF	3	D	1500	1000	12.3	37.1	882	441	2.43	18.3	54.9
	1/5	VRSF	5	D	1500	600	21.5	64.4	1080	539	1.85	23.5	70.6
	1/9	VRSF	S9	E	1500	333	34.3	103	1960	980	2.81	73.5	221
	1/15	VRSF	15	E	1500	200	57.2	172	2350	1180	2.80	91.4	274

Note 1) In case of attachment to a motor beyond the standard models(motor matching series), contact us.(How to measure dimensions of the flange may be changed in some cases.)
Note 2) The moment of inertia of input shaft conversion is only gained from the reducer, so it does not include moment of inertia of the motor.
Note 3) The max. input speed is 5000rpm, and usually set to 3000rpm or less.
Note 4) The permissible radial load is indicated on the center of the output shaft.
Note 5) All numerical values are within the range corresponding to the gear.
Note 6) For motor attachment procedure, see VR38 page.
Note 7) Rotation of the output shaft is in the same direction EF as that of motor input.

VRSF-3D・5D-1500

■Rough weight 3.9kg ■CAD data no.<VSD115□1>

P : TYPE1
Y : TYPE2
M : TYPE3

For details of TYPE1~3, see VR32 page.

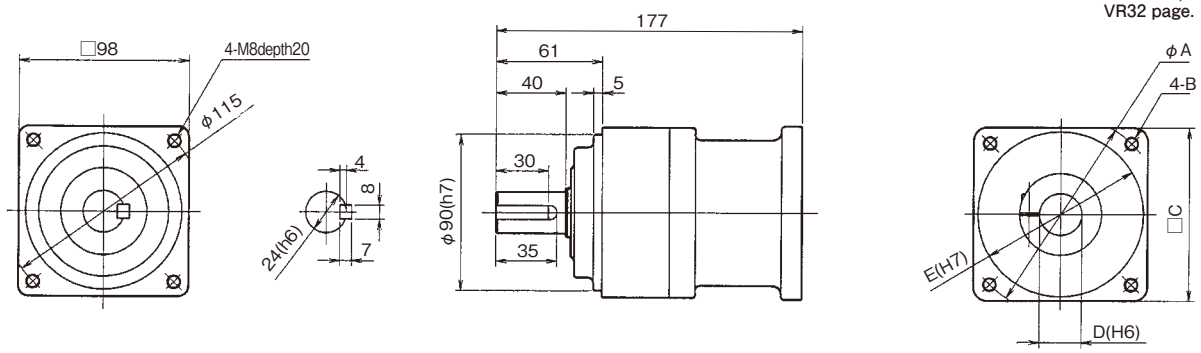

■ Detailed flange dimensions table (Unit mm)

Motor type	A	B	C	D	E
TYPE1	115	M8	100	19	95
TYPE2	115	M6	100	24	95
TYPE3	115	M8	100	24	95

※CAD data can be downloaded in the homepage.

VRSF-S9E-1500

■Rough weight 11.5kg ■CAD data no.<VSE115□1>

P : TYPE1
Y : TYPE2
M : TYPE3

For details of TYPE1~3, see VR32 page..

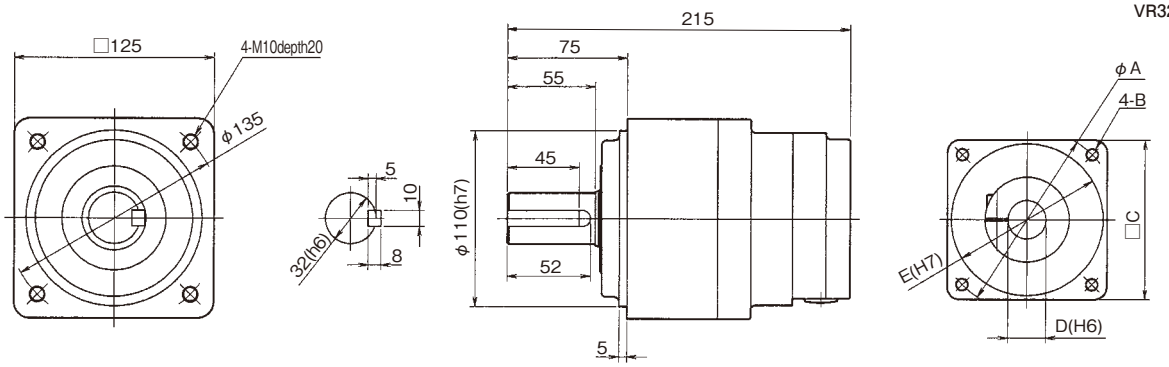

■ Detailed flange dimensions table (Unit mm)

Motor type	A	B	C	D	E
TYPE1	115	M8	100	19	95
TYPE2	115	M6	100	24	95
TYPE3	115	M8	100	24	95

※CAD data can be downloaded in the homepage.

VRSF-15E-1500

■Rough weight 12.5kg ■CAD data no.<VSE215□1>

P : TYPE1
Y : TYPE2
M : TYPE3

For details of TYPE1~3, see VR32 page.

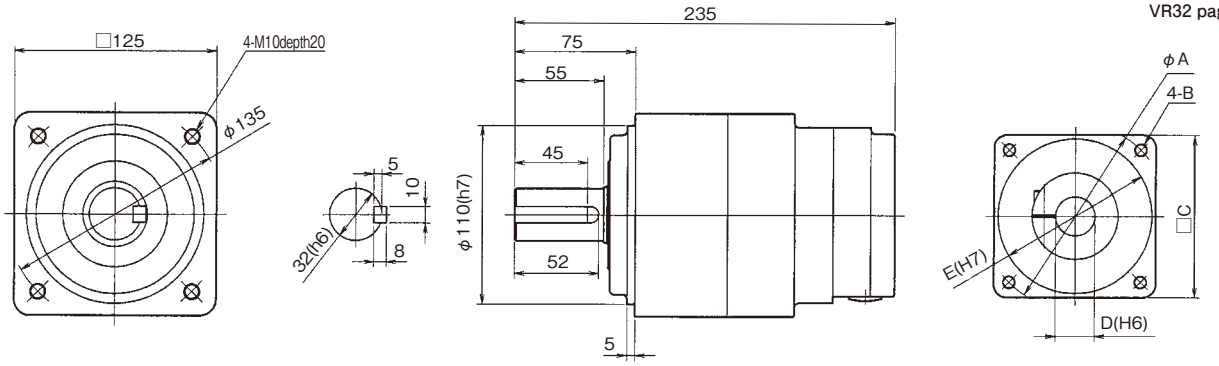

■ Detailed flange dimensions table (Unit mm)

Motor type	A	B	C	D	E
TYPE1	115	M8	100	19	95
TYPE2	115	M6	100	24	95
TYPE3	115	M8	100	24	95

※CAD data can be downloaded in the homepage.

Dimensional Drawing <2000W>

Performance Table <If input speed is 3000rpm>

■Performance Table 2000W

If input speed is 3000rpm:

Rated input motor cap.	Reduction ratio	Type				Output shaft speed	Standard output torque	Instantaneous max. output torque	Permissible radial load	Permissible thrust load	Internal moment of inertia of input shaft conversion	Permissible output torque	Instantaneous max. permissible output torque
		Model	Reduction ratio	Type no.	Motor cap.	(rpm)	(N・m)	(N・m)	(N)	(N)	(10^{-4}×kg·m^2)	(N・m)	(N・m)
2000W	1/3	VRSF	3	D	2000	1000	17.2	51.5	882	441	2.43	18.3	54.9
	1/5	VRSF	5	E	2000	600	23.8	71.5	1670	833	3.50	56.8	171
	1/9	VRSF	S9	E	2000	333	48.6	146	1960	980	2.81	73.5	221
	1/15	VRSF	15	E	2000	200	81.0	243	2350	1180	2.80	91.4	274

Note 1) In case of attachment to a motor beyond the standard models(motor matching series), contact us.(How to measure dimensions of the flange may be changed in some cases.)
Note 2) The moment of inertia of input shaft conversion is only gained from the reducer, so it does not include moment of inertia of the motor.
Note 3) The max. input speed is 5000rpm, and usually set to 3000rpm or less.
Note 4) The permissible radial load is indicated on the center of the output shaft.
Note 5) All numerical values are within the range corresponding to the gear.
Note 6) For motor attachment procedure, see VR38 page.
Note 7) Rotation of the output shaft is in the same direction EF as that of motor input.

VRSF-3D-2000

■Rough weight 3.9kg ■CAD data no.<VSD120□1>

P : TYPE1
Y : TYPE2
M : TYPE3

For details of TYPE1~3, see VR32 page.

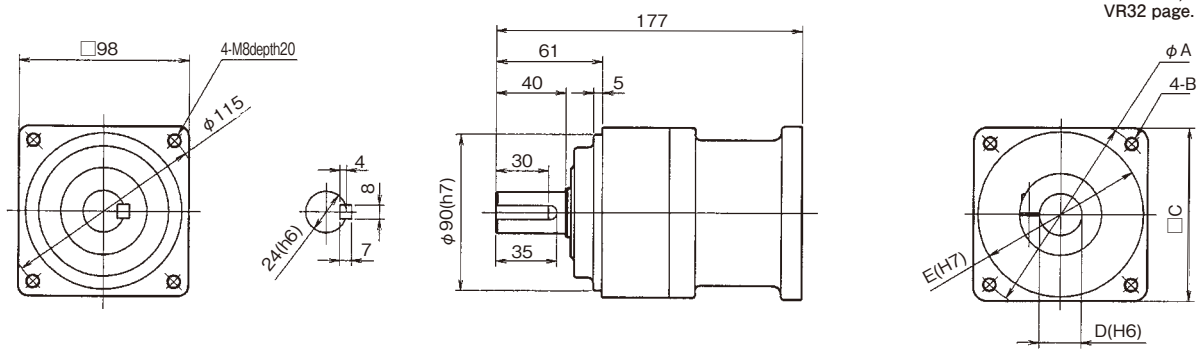

■ Detailed flange dimensions table (Unit mm)

Motor type	A	B	C	D	E
TYPE1	115	M8	100	19	95
TYPE2	115	M6	100	24	95
TYPE3	115	M8	100	24	95

※CAD data can be downloaded in the homepage.

VRSF-5E・S9E-2000

■Rough weight 11.5kg ■CAD data no.<VSE120□1>

P : TYPE1
Y : TYPE2
M : TYPE3

For details of TYPE1~3, see VR32 page.

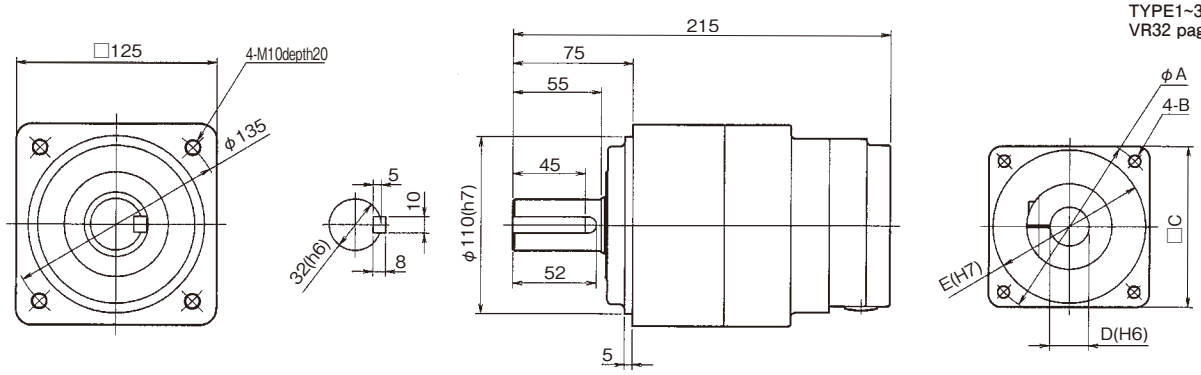

■ Detailed flange dimensions table (Unit mm)

Motor type	A	B	C	D	E
TYPE1	115	M8	100	19	95
TYPE2	115	M6	100	24	95
TYPE3	115	M8	100	24	95

※CAD data can be downloaded in the homepage.

VRSF-15E-2000

■Rough weight 12.5kg ■CAD data no.<VSE22□1>

P : TYPE1
Y : TYPE2
M : TYPE3

For details of TYPE1~3, see VR32 page.

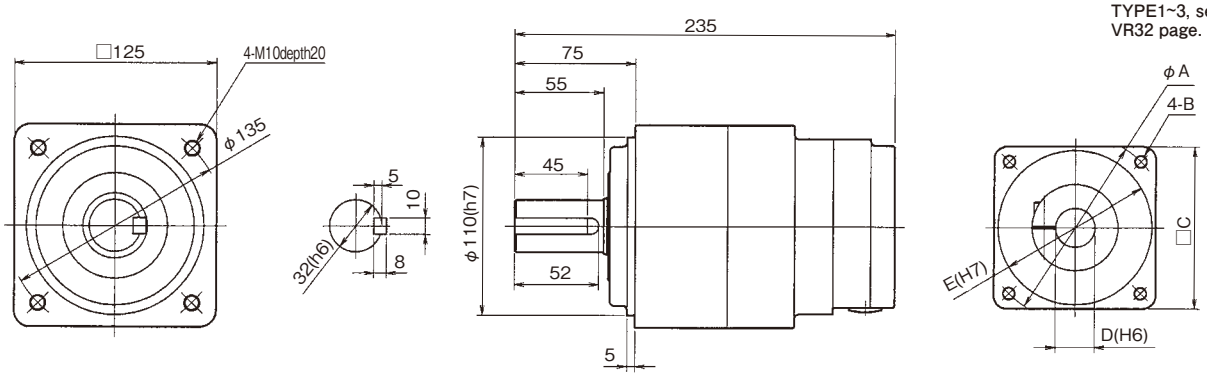

■ Detailed flange dimensions table (Unit mm)

Motor type	A	B	C	D	E
TYPE1	115	M8	100	19	95
TYPE2	115	M6	100	24	95
TYPE3	115	M8	100	24	95

※CAD data can be downloaded in the homepage.

Dimensional Drawing <2500·3000W>

Performance Table <If input speed is 3000rpm>

■Performance Table 2500W

If input speed is 3000rpm:

Rated input motor cap.	Reduction ratio	Type				Output shaft speed	Standard output torque	Instantaneous max. output torque	Permissible radial load	Permissible thrust load	Internal moment of inertia of input shaft conversion	Permissible output torque	Instantaneous max. permissible output torque
		Model	Reduction ratio	Type no.	Motor cap.	(rpm)	(N・m)	(N・m)	(N)	(N)	(10^{-4}×kg·m^2)	(N・m)	(N・m)
2500W	1/3	VRSF	3	E	2500	1000	19.0	57.2	1370	686	5.55	44.1	132
	1/5	VRSF	5	E	2500	600	31.8	95.5	1670	833	3.50	56.8	171
	1/9	VRSF	S9	E	2500	333	60.8	182	1960	980	2.81	73.5	221

Note 1) In case of attachment to a motor beyond the standard models(motor matching series), contact us.(How to measure dimensions of the flange may be changed in some cases.)
Note 2) The moment of inertia of input shaft conversion is only gained from the reducer, so it does not include moment of inertia of the motor.
Note 3) The max. input speed is 5000rpm, and usually set to 3000rpm or less.
Note 4) The permissible radial load is indicated on the center of the output shaft.
Note 5) All numerical values are within the range corresponding to the gear.
Note 6) For motor attachment procedure, see VR38 page.
Note 7) Rotation of the output shaft is in the same direction as that of motor input.

VRSF-3E・5E・S9E-2500

■Rough weight 11.5kg ■CAD data no.<VSE125□1>

P : TYPE1
Y : TYPE2

For details of TYPE1~3, see VR32 page.

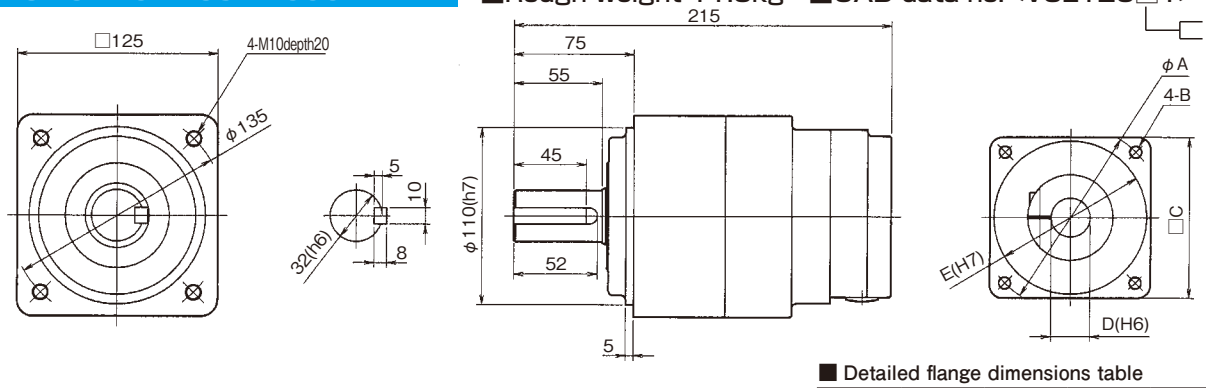

■ Detailed flange dimensions table (Unit mm)

Motor type	A	B	C	D	E
TYPE1	115	M8	100	19	95
TYPE2	115	M6	100	24	95
TYPE3	—	—	—	—	—

※CAD data can be downloaded in the homepage.

■Performance Table 3000W

If input speed is 3000rpm

Rated input motor cap.	Reduction ratio	Type				Output shaft speed	Standard output torque	Instantaneous max. output torque	Permissible radial load	Permissible thrust load	Internal moment of inertia of input shaft conversion	Permissible output torque	Instantaneous max. permissible output torque
		Model	Reduction ratio	Type no.	Motor cap.	(rpm)	(N・m)	(N・m)	(N)	(N)	(10^{-4}×kg·m^2)	(N・m)	(N・m)
3000W	1/3	VRSF	3	E	3000	1000	23.7	71.2	1370	686	5.50	44.1	132
	1/5	VRSF	5	E	3000	600	39.6	119	1670	833	3.48	56.8	171
	1/9	VRSF	S9	E	3000	333	73.0	219	1960	980	2.77	73.5	221

Note 1) In case of attachment to a motor beyond the standard models(motor matching series), contact us.(How to measure dimensions of the flange may be changed in some cases.)
Note 2) The moment of inertia of input shaft conversion is only gained from the reducer, so it does not include moment of inertia of the motor.
Note 3) The max. input speed is 5000rpm, and usually set to 3000rpm or less.
Note 4) The permissible radial load is indicated on the center of the output shaft.
Note 5) All numerical values are within the range corresponding to the gear.
Note 6) For motor attachment procedure, see VR38 page.
Note 7) Rotation of the output shaft is in the same direction as that of motor input.

VRSF-3E・5E・S9E-3000

■Rough weight 12kg ■CAD data no.<VSE130□1>

P : TYPE1
Y : TYPE2

For details of TYPE1~3, see VR32 page.

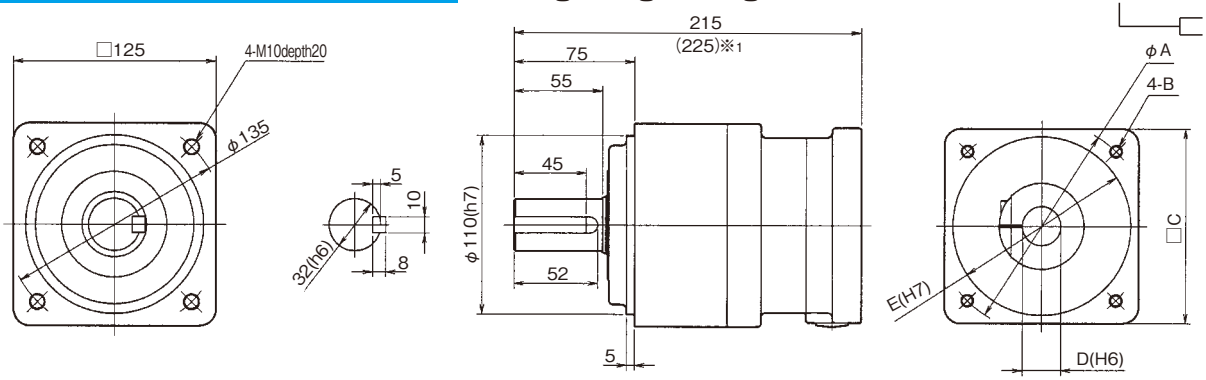

※1 TYPE2 has the numerical value indicated in ( ).

■ Detailed flange dimensions table (Unit mm)

Motor type	A	B	C	D	E
TYPE1	130	M8	120	22	110
TYPE2	145	M8	130	28	110
TYPE3	—	—	—	—	—

※CAD data can be downloaded in the homepage.

■Performance Table 3500W

If input speed is 3000rpm:

Rated input motor cap.	Reduction ratio	Type				Output shaft speed	Standard output torque	Instantaneous max. output torque	Permissible radial load	Permissible thrust load	Internal moment of inertia of input shaft conversion	Permissible output torque	Instantaneous max. permissible output torque
		Model	Reduction ratio	Type no.	Motor cap.	(rpm)	(N・m)	(N・m)	(N)	(N)	(10^{-4}×kg·m^2)	(N・m)	(N・m)
3500W	1/3	VRSF	3	E	3500	1000	28.3	85.2	1370	686	5.55	44.1	132
	1/5	VRSF	5	E	3500	600	47.2	141	1670	833	3.48	56.8	171

Note 1) In case of attachment to a motor beyond the standard models(motor matching series), contact us.(How to measure dimensions of the flange may be changed in some cases.)
Note 2) The moment of inertia of input shaft conversion is only gained from the reducer, so it does not include moment of inertia of the motor.
Note 3) The max. input speed is 5000rpm, and usually set to 3000rpm or less.
Note 4) The permissible radial load is indicated on the center of the output shaft.
Note 5) All numerical values are within the range corresponding to the gear.
Note 6) For motor attachment procedure, see VR38 page.
Note 7) Rotation of the output shaft is in the same direction as that of motor input.

VRSF-3E・5E-3500

■Rough weight 12kg ■CAD data no.<VSE135□1>

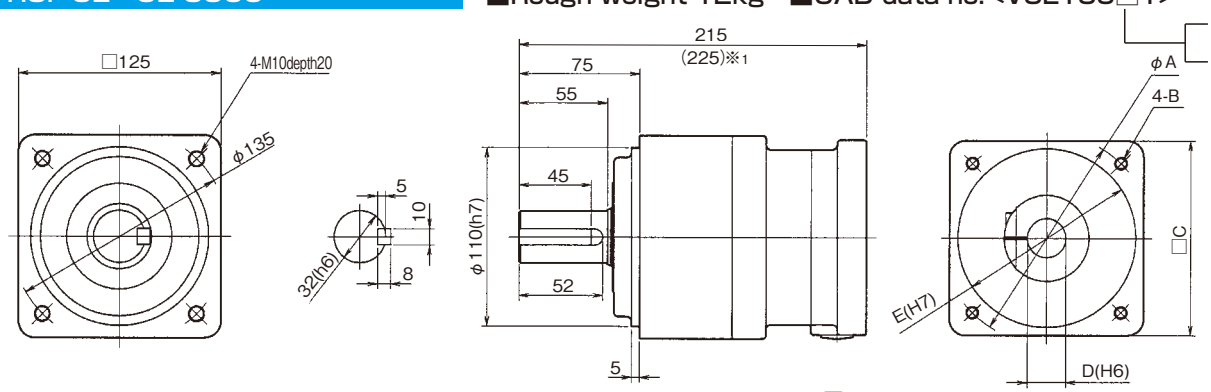

※1 TYPE2 has the numerical value indicated in ( ).

■ Detailed flange dimensions table (Unit mm)

Motor type	A	B	C	D	E
TYPE1	130	M8	120	22	110
TYPE2	—	—	—	—	—
TYPE3	145	M8	130	28	110

※CAD data can be downloaded in the homepage.

■Performance Table 4000W

If input speed is 3000rpm:

Rated input motor cap.	Reduction ratio	Type				Output shaft speed	Standard output torque	Instantaneous max. output torque	Permissible radial load	Permissible thrust load	Internal moment of inertia of input shaft conversion	Permissible output torque	Instantaneous max. permissible output torque
		Model	Reduction ratio	Type no.	Motor cap.	(rpm)	(N・m)	(N・m)	(N)	(N)	(10^{-4}×kg·m^2)	(N・m)	(N・m)
4000W	1/3	VRSF	3	E	4000	1000	33.1	99.0	1370	686	5.78	44.1	132
	1/5	VRSF	5	E	4000	600	55.3	166	1670	833	3.75	56.8	171

Note 1) In case of attachment to a motor beyond the standard models(motor matching series), contact us.(How to measure dimensions of the flange may be changed in some cases.)
Note 2) The moment of inertia of input shaft conversion is only gained from the reducer, so it does not include moment of inertia of the motor.
Note 3) The max. input speed is 5000rpm, and usually set to 3000rpm or less.
Note 4) The permissible radial load is indicated on the center of the output shaft.
Note 5) All numerical values are within the range corresponding to the gear.
Note 6) For motor attachment procedure, see VR38 page.
Note 7) Rotation of the output shaft is in the same direction as that of motor input.

VRSF-3E・5E-4000

■Rough weight 13kg ■CAD data no.<VSE140□1>

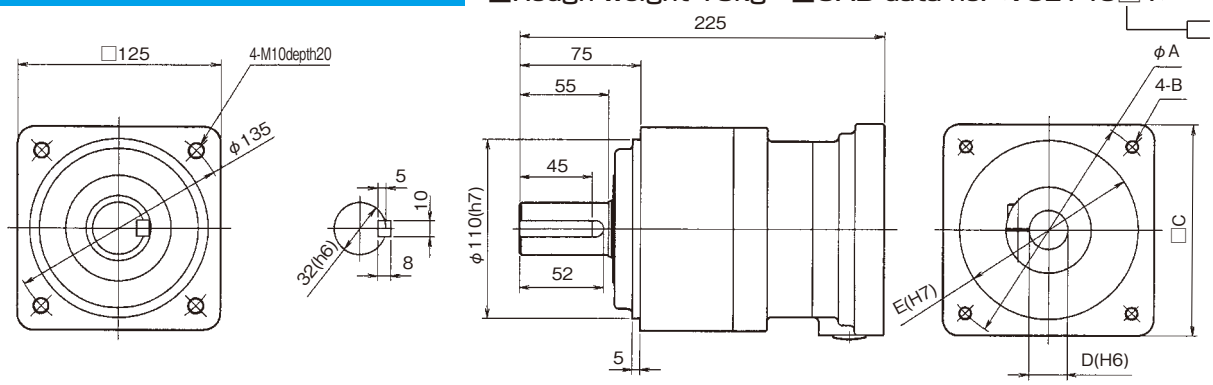

■ Detailed flange dimensions table (Unit mm)

Motor type	A	B	C	D	E
TYPE1	145	M8	130	24	110
TYPE2	145	M8	130	28	110
TYPE3	—	—	—	—	—

※CAD data can be downloaded in the homepage.

Dimensional Drawing <4500·5000W>

Performance Table <If input speed is 3000rpm>

■Performance Table 4500W

If input speed is 3000rpm:

Rated input motor cap.	Reduction ratio	Type				Output shaft speed	Standard output torque	Instantaneous max. output torque	Permissible radial load	Permissible thrust load	Internal moment of inertia of input shaft conversion	Permissible output torque	Instantaneous max. permissible output torque
		Model	Reduction ratio	Type no.	Motor cap.	(rpm)	(N・m)	(N・m)	(N)	(N)	(10^{-4}×kg·m^2)	(N・m)	(N・m)
4500W	1/3	VRSF	3	E	4500	1000	37.7	113	1370	686	5.78	44.1	132

Note 1) In case of attachment to a motor beyond the standard models(motor matching series), contact us.(How to measure dimensions of the flange may be changed in some cases.)
Note 2) The moment of inertia of input shaft conversion is only gained from the reducer, so it does not include moment of inertia of the motor.
Note 3) The max. input speed is 5000rpm, and usually set to 3000rpm or less.
Note 4) The permissible radial load is indicated on the center of the output shaft.
Note 5) All numerical values are within the range corresponding to the gear.
Note 6) For motor attachment procedure, see VR38 page.
Note 7) Rotation of the output shaft is in the same direction as that of motor input.

VRSF-3E-4500

■Rough weight 13kg ■CAD data no.<VSE145□1>

P : TYPE1
Y : TYPE2

For details of TYPE1~3, see VR32 page.

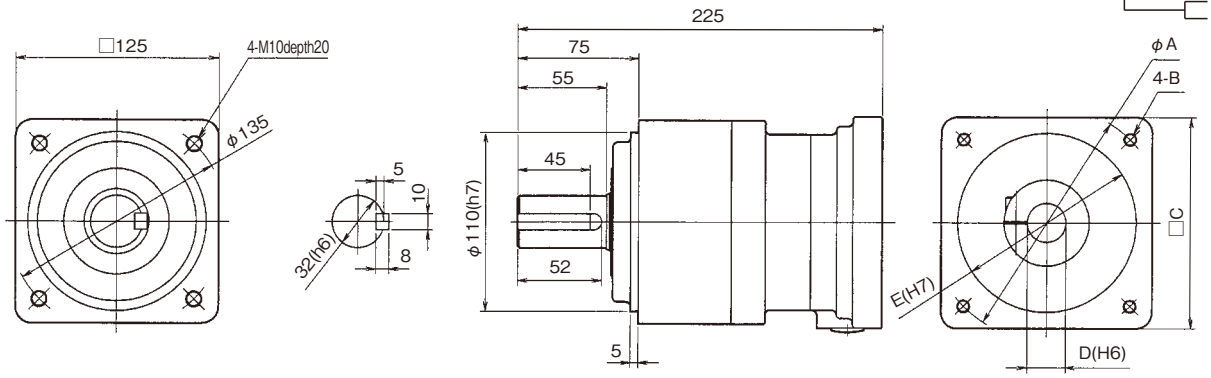

■ Detailed flange dimensions table (Unit mm)

Motor type	A	B	C	D	E
TYPE1	145	M8	130	24	110
TYPE2	—	—	—	—	—
TYPE3	—	—	—	—	—

※CAD data can be downloaded in the homepage.

■Performance Table 5000W

If input speed is 3000rpm:

Rated input motor cap.	Reduction ratio	Type				Output shaft speed	Standard output torque	Instantaneous max. output torque	Permissible radial load	Permissible thrust load	Internal moment of inertia of input shaft conversion	Permissible output torque	Instantaneous max. permissible output torque
		Model	Reduction ratio	Type no.	Motor cap.	(rpm)	(N・m)	(N・m)	(N)	(N)	(10^{-4}×kg·m^2)	(N・m)	(N・m)
5000W	1/3	VRSF	3	E	5000	1000	42.9	128	1370	686	5.78	44.1	132

Note 1) In case of attachment to a motor beyond the standard models(motor matching series), contact us.(How to measure dimensions of the flange may be changed in some cases.)
Note 2) The moment of inertia of input shaft conversion is only gained from the reducer, so it does not include moment of inertia of the motor.
Note 3) The max. input speed is 5000rpm, and usually set to 3000rpm or less.
Note 4) The permissible radial load is indicated on the center of the output shaft.
Note 5) All numerical values are within the range corresponding to the gear.
Note 6) For motor attachment procedure, see VR38 page.
Note 7) Rotation of the output shaft is in the same direction as that of motor input.

VRSF-3E-5000

■Rough weight 13kg ■CAD data no.<VSE150□1>

P : TYPE1
Y : TYPE2
M : TYPE3

For details of TYPE1~3, see VR32 page.

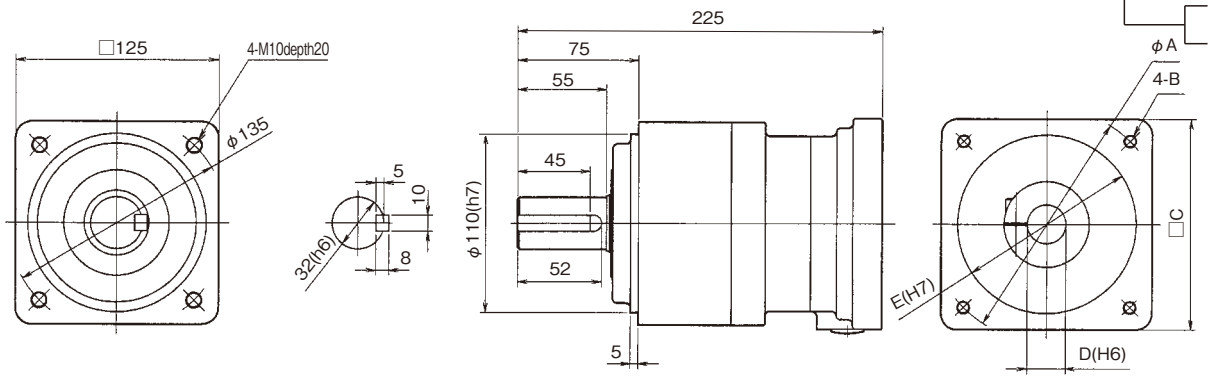

■ Detailed flange dimensions table (Unit mm)

Motor type	A	B	C	D	E
TYPE1	145	M8	130	24	110
TYPE2	145	M8	130	28	110
TYPE3	145	M8	130	28	110

※CAD data can be downloaded in the homepage.

Motor Matching Table

<If input speed is 3000rpm>

■ If input speed is 3000rpm

Motor manufacturer	Motor series	Motor capacity(W)				
		50W	100W	200W	400W	750W
Panasonic	MSME	TYPE1				
	MSMD	TYPE1				
	MSMA	TYPE1				
	MUMA	Out of standard	Out of standard	TYPE1		No subject
	MBMK	TYPE1	Out of standard	TYPE1		
Yaskawa Electric	SGMJV	TYPE3				
	SGMAV	TYPE3				
	SGMAS	TYPE2				
	SJME	No subject	TYPE2			
	SGMAH	TYPE2				
Mitsubishi Electric	HF-KP	TYPE3				
	HF-MP	TYPE3				
	HF-KN	TYPE3				
	HC-PQ	TYPE3				No subject
	HC-KQ	TYPE3				No subject
	HC-KFS	TYPE3				
	HC-MFS	TYPE3				
Omron	R88M-K	TYPE1				
	R88M-G	TYPE3		TYPE1		
	R88M-W	TYPE2				
	R7M-A	TYPE2				
	R7M-Z	No subject	TYPE2			
	R88M-U	TYPE2				
Fuji Electric Systems	GYS※	TYPE2				
Sanyo denki	P30B	TYPE3				TYPE2
	Q1	TYPE3				Out of standard
Keyence	SV	TYPE3				
	MV	TYPE3				Out of standard
Toshiba Machine	VLBSV-Z※	Out of standard		TYPE3		
	VLBSV-ZA※	Out of standard		TYPE3		
	VLBST	Out of standard		TYPE3		Out of standard
Tamagawa Seiki	TBL-i ※	TYPE3				No subject
	TBL-i Ⅱ ※	TYPE3				Out of standard
Nikki denso	NA80※	TYPE3				Out of standard
	NA70 ※	TYPE3				No subject
	NA50	TYPE1				
Sanmei	TS※	TYPE3				Out of standard
	SS※	TYPE3				Out of standard
Hitachi Industrial Equipment Systems	ADMA	TYPE3				Out of standard
Miki Pulley	SA3	TYPE1				

Note 1) If an oil-seal is not present and the size is different, attachment of the oil-seal may correspond to a special order, in some cases.
Note 2) If the motor shaft is of D-cut and taper type, it corresponds to a special order.
Note 3) Note that thrust power arising out of instantaneous max. output torque by the combination of motor capacity(motor of the motor series table ※) and reduction ratio may exceed permissible thrust power of the servo motor. See the thrust load table on VR46 page.)
Note 4) Out-of-standard may correspond to a special order in some cases. For details, contact us.
Note 5)

VR reducers can attach to all brands of servo motors, including the following. Please contact our nearest sales branch or distributor.

Shimponia Technology Ltd. | NIDEC Sankyo | Allen-Bradley | etc.

■ If input speed is 3000rpm

Motor manufacturer	Motor series	Motor capacity(W)								
		1000W	1500W	2000W	2500W	3000W	3500W	4000W	4500W	5000W
Panasonic	MSME	Out of standard	TYPE1		No subject	TYPE1	No subject	TYPE1	No subject	TYPE1
	MSMA	TYPE1			No subject	TYPE1	No subject	TYPE1	No subject	TYPE1
Yaskawa Electric	SGMSV	TYPE2					No subject	TYPE2	No subject	TYPE2
	SGMSS	TYPE2					No subject	TYPE2	No subject	TYPE2
	SGMSH	TYPE2			No subject	TYPE2	No subject	TYPE2	No subject	TYPE2
Mitsubishi Electric	HC-RP	TYPE3			No subject		TYPE3	No subject		TYPE3
	HC-RFS	TYPE3			No subject		TYPE3	No subject		TYPE3
Omron	R88M-K	Out of standard	TYPE1		No subject	TYPE1	No subject	TYPE1	No subject	TYPE1
	R88M-G	TYPE1					No subject	TYPE1	No subject	TYPE1
	R88M-W	TYPE2			No subject	TYPE2	No subject	TYPE2	No subject	TYPE2
	R88M-U	TYPE2			No subject	TYPE2	No subject	TYPE2	No subject	TYPE2
Fuji Electric Systems	GYS	TYPE3			No subject	TYPE2	No subject	TYPE2	No subject	TYPE2

Standard compatibility with the following motor series

Motor manufacturer	Motor series	Motor capacity(W)
Mitsubishi Electric	HF-SP	500W・1000W・1500W・2000W・3500W
	HC-SFS ※	
Yaskawa Electric	SGMPS	100W・200W・400W・750W・1500W
	SGMPH	
Panasonic	MQMA	100W・200W・400W
Omron	R88M-WP	100W・200W・400W・750W・1500W
	R7M-AP	100W・200W・400W・750W
Fuji Electric Systems	GYC	100W・200W・400W
Fanuc	β is ※	200W・400W・500W・750W・1200W

Note 1) If an oil-seal is not present and the size is different, attachment of the oil-seal may correspond to a special order, in some cases.
Note 2) If the motor shaft is of D-cut and taper type, it corresponds to a special order.
Note 3) Out-of-standard may correspond to a special order in some cases. For details, contact us.
Note 4) The motor in the above-mentioned motor series※ may correspond to both specifications of 3000rpm and 2000rpm in standards. For details, contact us.

VR reducers can attach to all brands of servo motors, including the following. Please contact our nearest sales branch or distributor.

Shimponia Technology Ltd. | NIDEC Sankyo | Allen-Bradley | etc.

Operating Mechanism

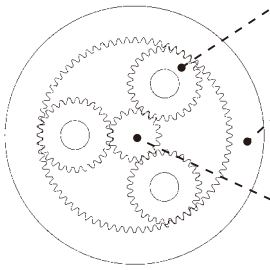

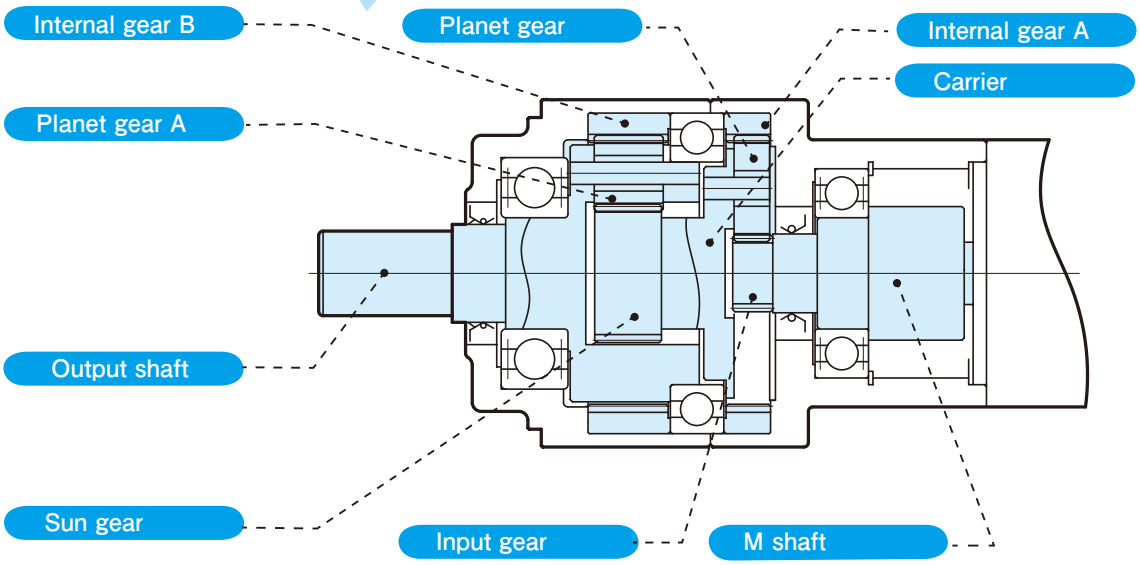

1step reduction part

Motor~input gear~planet gear A~carrier

Rotation from the motor is delivered by the input gear attached to the M shaft. The input gear makes the planet gear A contacting the internal gear A go in gear. This transmits orbital motion to the planet gear A and rotates the 2step sun gear through the carrier.

The rotating direction is same as input rotation.

2step reduction part

Carrier~sun gear~planet gear B~output shaft

Rotation of the carrier is delivered by the sun gear attached to the carrier. This transmission delivers orbital motion to the planet gear B through a motion going in gear with the planet gear B contacting the internal gear B. The output shaft is rotated by this orbital movement.

The rotating direction is same as input rotation.

The above mention is explanation for the 2step reducer.
The 1step reducer runs only under the operating mechanism of the 2step reduction part.

Selection of type no.

For ABLE REDUCER, once motor capacity and reduction ratio are fixed, reducer type may be simply selected according to the 'Reduction ratio & type no. table'. However, in case that combination out of the standard is made or detailed calculation is necessary, select applicable reducer type according to the equations as suggested below:

Checkup of load torque pattern

Check the load torque pattern to be given to the reducer.

■ Description of symbols

$T_1 \sim T_n$ (N・m) : Load torque
$t_1 \sim t_n$ (N・m) : Time
$n_1 \sim n_n$ (N・m) : Output speed (mean rpm upon acceleration & reduction)
n_{OUT} : Max. output speed (rpm) $\geq n_1 \sim n_n$
n_{in} : Max. input speed (rpm) $\geq n_1 \times R \sim n_n \times R$
R : Reduction ratio

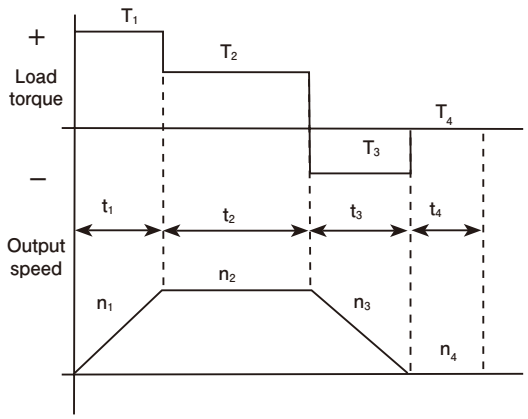

Type selection procedure

Select the type according to the following procedure:

1 Calculate mean load torque given to the output shaft from the load torque pattern.
Mean load torque : T_a (N・m)

$$T_a = \sqrt[3]{\frac{n_1t_1|T_1|^3 + n_2t_2|T_2|^3 + \cdots + n_nt_n|T_n|^3}{n_1t_1 + n_2t_2 + \cdots + n_nt_n}}$$

Calculate mean output speed from the load torque pattern.
Output speed : n_{aOUT} (rpm)

$$n_{aOUT} = \frac{n_1t_1 + n_2t_2 + \cdots + n_nt_n}{t_1 + t_2 + \cdots + t_n}$$

OK

2 Provisionally select the type to meet the following equation.

$T_a \leqq$ Permissible output torque

(For permissible output torque of each type, see the performance table.)

OK

3 Decide reduction ratio (R) from max. output speed (n_{OUT}) and max. input speed (n_{IN}).

$$\frac{n_{IN}}{n_{OUT}} \geqq R$$

(n_{IN} is limited by motors, etc.)

Calculate max. input speed from max. output speed (n_{OUT}) and reduction ratio (R).

$$n_{IN} = n_{OUT}R$$

OK

4 Calculate mean input speed n_{aIN} from mean output speed n_{aOUT} and reduction ratio (R).

$$n_{aIN} = n_{aOUT}R \leqq 3{,}000\,(\text{rpm})$$

OK

5 Ensure that max. input speed is less than the fixed max. input speed.

$$n_{IN} \leqq 5{,}000\,(\text{rpm})$$

OK

6 Ensure that T_1 and T_3 are within the numerical values of max. instant time permissible output torque in the performance table.

OK

Decision of type

※If there are values that do not fit within the maximum, examine it again as a stronger type, or reduce the specifications, e.g. load torque or speed.

Examples of type selection

1

[Operating pattern]

At operation : T_1=90(Nm) t_1=0.5(sec) n_1=90(rpm)
At normal operation : T_2=35(Nm) t_2=5(sec) n_2=180(rpm)
At reduction : T_3=-70(Nm) t_3=1(sec) n_3=90(rpm)
At stop : T_4=0(Nm) t_4=10(sec) n_4=0(rpm)

[Max. number of rotations]

Max. output speed : n_{OUT}=180(rpm)
Max. input speed : n_{IN}=5000(rpm) (limited by the motor)

OK

2

Calculate mean load torque given to the output shaft from the load torque pattern. Mean load torque : T_a(N・m)

$$T_a = \sqrt[3]{\frac{90 \times 0.5 \times |90|^3 + 180 \times 5 \times |35|^3 + 90 \times 1 \times |-70|^3 + 0}{90 \times 0.5 + 180 \times 5 + 90 \times 1 + 0}}$$

$$= 46.2\,(\mathrm{N\,m})$$

Calculate mean output speed from the load torque pattern.
Mean output speed : n_{aOUT}(rpm)

$$n_{aOUT} = \frac{90 \times 0.5 + 180 \times 5 + 90 \times 1 + 0}{0.5 + 5 + 1 + 10} = 62.7\,(\mathrm{rpm})$$

OK

3

Provisionally select the type.

$46.2 \leqq 50.7\,(\mathrm{Nm})$

(Select 25D-750 from the performance table)

OK

4

Decide reduction ratio(R) from max. output speed(n_{OUT}) and max. input speed(n_{IN}).

$$\frac{5000}{180} = 27.8 \geqq 25$$

Calculate max. input speed (n_{IN}) from max. output speed(n_{OUT}) and reduction ratio(R).

$$n_{IN} = 180 \times 25 = 4{,}500\,(\mathrm{rpm})$$

OK

5

Calculate mean input speed naIN from mean output speed na_{OUT} VR and reduction ratio(R).

$$n_{aIN} = 62.7 \times 25 = 1567.5 \leqq 3{,}000\,(\mathrm{rpm})$$

OK

6

Ensure that max. input speed is less than the fixed max. input speed.

$$n_{IN} = 4{,}500 \leqq 5{,}000\,(\mathrm{rpm})$$

OK

7

Ensure that T_1 and T_3 are within the numerical values of max. instant time permissible output torque in the performance table.

$T_1 = 90 \leqq 152\,(\mathrm{Nm})$
$T_3 = 70 \leqq 152\,(\mathrm{Nm})$

OK

Fixed to 25D-750

Thrust load (to motor)

Thrust force acts in a shaft direction for units equipped with a helical gear. However, our ABLE REDUCER is designed to mitigate thrust force and thus does not influence a servo motor irrespective of backlash standard type, LB type, and PB type. For other motor series, see permissible thrust of each motor manufacturer.

Rated input motor capacity(W)	Type				ABLE REDUCER thrust force	Instantaneous time permissible thrust load of servo motor(N)		
	Model		Type no.	Motor capacity		PANASONIC MSMA series	YASKAWA ELECTRIC SGMAH series	MITSUBISHI ELECTRICa HC-MF series
50W	VRSF	3	B	50	7	58	54	59
	VRSF	5	B	50	15			
	VRSF	S9	B	50	29			
	VRSF	15	B	50	15			
	VRSF	20	B	50	15			
	VRSF	25	B	50	15			
	VRSF	35	B	50	22			
	VRSF	45	C	50	29			
	VRSF	81	C	50	29			
100W	VRSF	3	B	100	15	58	54	59
	VRSF	5	B	100	29			
	VRSF	S9	B	100	46			
	VRSF	15	B	100	29			
	VRSF	20	B	100	29			
	VRSF	25	B	100	29			
	VRSF	35	C	100	16			
	VRSF	45	C	100	46			
	VRSF	81	D	100	46			
200W	VRSF	3	B	200	22	98	74	98
	VRSF	5	B	200	44			
	VRSF	S9	C	200	43			
	VRSF	15	C	200	21			
	VRSF	20	C	200	21			
	VRSF	25	C	200	21			
	VRSF	35	C	200	32			
	VRSF	45	D	200	43			
	VRSF	81	E	200	17			
400W	VRSF	3	B	400	44	98	74	98
	VRSF	5	C	400	43			
	VRSF	S9	C	400	64			
	VRSF	15	C	400	43			
	VRSF	20	C	400	43			
	VRSF	25	C	400	43			
	VRSF	35	D	400	26			
	VRSF	45	E	400	34			
750W	VRSF	3	C	750	20	147	147	147
	VRSF	5	C	750	40			
	VRSF	S9	D	750	64			
	VRSF	15	D	750	32			
	VRSF	20	D	750	32			
	VRSF	25	D	750	32			
	VRSF	35	E	750	48			

Note 1) Thrust force : Numerical value upon max. instantaneous output torque

Permissible radial load (to reducer)

■Coaxial shaft radial

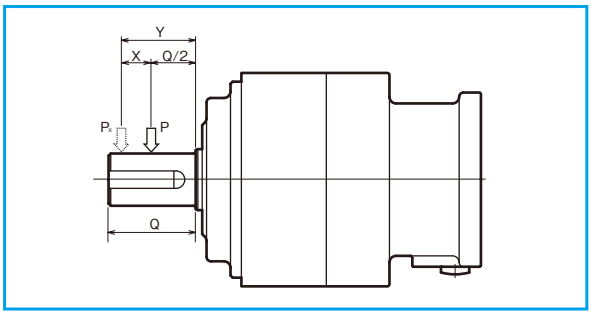

If radial load is out of the center of the output shaft, calculate using the following equations and positive numbers:

$$P_X = \{K/(K + X)\} \times P$$
$$X = Y - Q/2$$

P : Permissible radial load(N)
Q : Positive number
K : Positive number
X : Load point displacement distance(mm)
Y : Load point(mm)
Px : Permissible shaft load(N)

Type no.	Positive number:Q	Positive number:K
B	20	46
C	30	70
D	40	79.5
E	55	104

Comparison of noise values

Reduction ratio 1/3

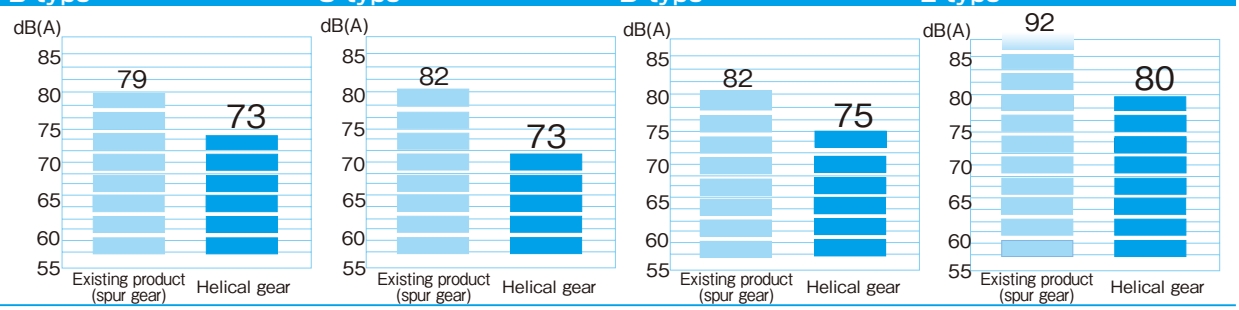

Reduction ratio 1/5

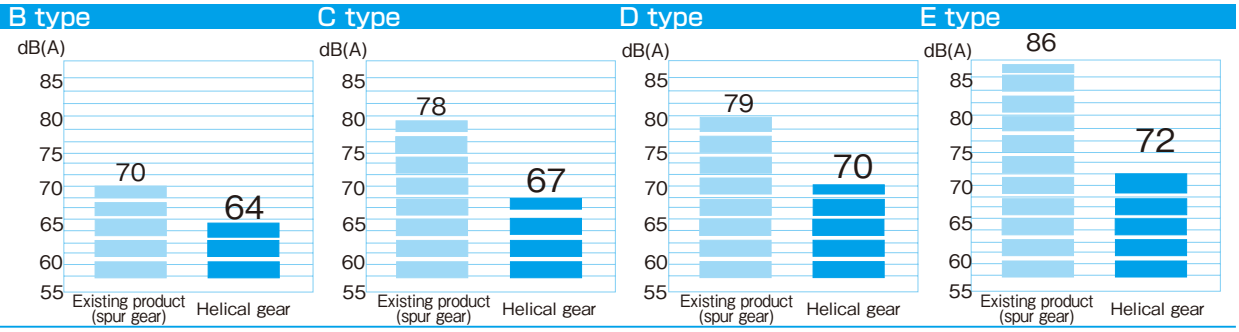

Reduction ratio 1/9

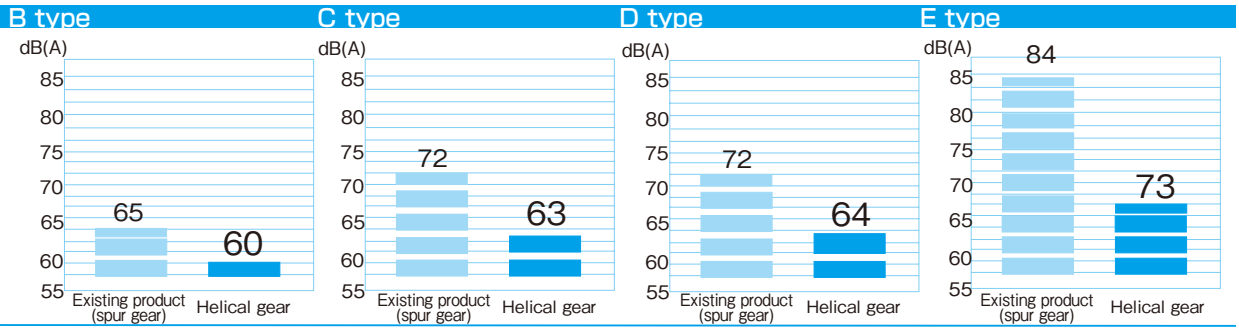

Reduction ratio 1/15

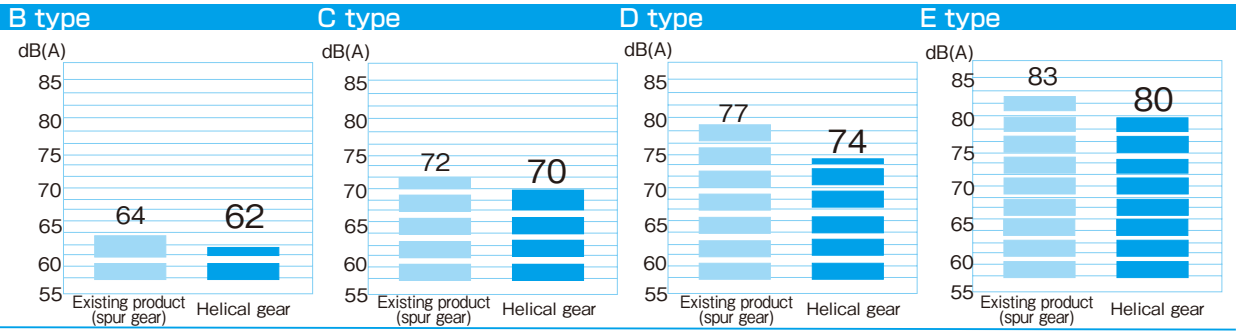

Reduction ratio 1/25

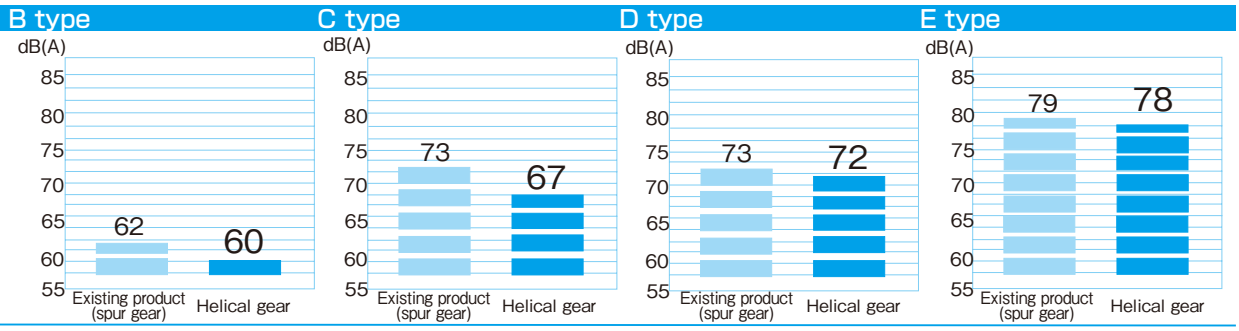

■The measuring conditions in an internal survey are as mentioned below:

※Reducer input speed : 3000rpm ※Measurement spot : 50cm distant from the product ※Noise value : Typical values chosen for noise values
※Load : Reducer load rating ※Reducer fixation : The reducer is fixed onto the L-type attachment plate so that it cannot move.

Jointing

1. Insertion into motor

If a customer personally assembles the servo motor and reducer please use the following tip. The reducer flange to which the servo motor is attached has different dimensions based on the motor specified. Therefore, assembly may be impossible for any other motor. Make sure the correct motor is specified before ordering the reducer.

[VRSF spec. in case of assembling a motor without key]

① Take off the rubber cap, turn the input shaft, and match the head of the bolt to the hole of the rubber cap. Make sure that the set bolt is loosened.
② Gradually put the motor shaft into the input shaft (Ensure that it is smoothly put in without jam.) Be careful not to be inserted with the motor tilted.
③ Attach the motor to the reducer and fasten the bolt with designated fastening torque. See Table 1.
④ Fasten the set bolt of the input shaft with designated fastening torque using torque wrench, etc. See Table 2.
⑤ Attach a rubber cap. It is the end of assembling.

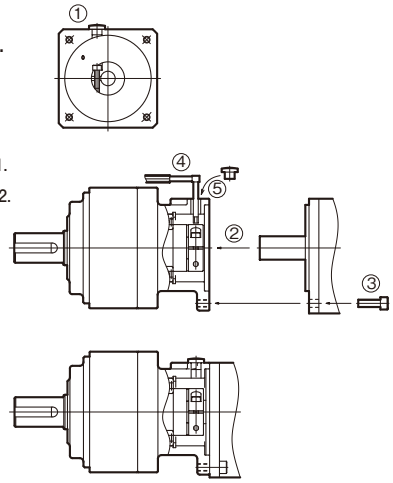

■ Table 1

Motor combination bolt	Fastening torque	
	N・m	kgf・cm
M3	1.0	10
M4	2.9	30
M5	5.9	60
M6	9.8	100
M8	19.6	200
M10	39.2	400
M12	68.6	700
M16	162	1650

■ Table 2

Motor combination bolt	Fastening torque	
	N・m	kgf・cm
M3	1.5	15
M4	3.5	36
M5	7.1	72
M6	12	122
M8	30	306

If the key of a key-attached motor is removed, motor assembling without the above-mentioned key may be followed. There is no risk of dislocation.

[VRSF spec. in case of assembling a motor with key]

① Take off the rubber cap, turn the input shaft, and match the head of the bolt to the hole of the rubber cap.
② Coat carbon formation inhibitors(molybdenum dioxide etc.) onto the motor shaft, match the key to the key slot, and gradually
③ Combine the motor with the reducer and fasten with the designated fastening bolt. See Table 1.
④ For set bolt of the input shaft, fasten using torque wrench with the designated fastening torque with the key firmly pressed. See Table 3.
⑤ Attach a rubber cap.
The is the end.

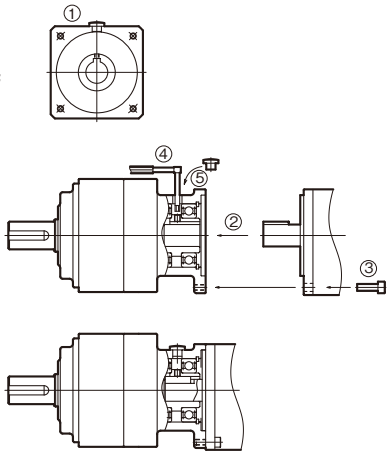

■ Table 3

Motor combination bolt	Fastening torque	
	N・m	kgf・cm
M4	2.0	20
M5	4.3	44
M6	7.3	74
M8	16.8	171

2. Jointing with reducer

In case of jointing a reducer with the device, make sure that the combining side is plane without inconsistency, and fasten the bolt with designated fastening torque with torque wrench. See Table 4.

■ Table 4

Reducer combination bolt		Fastening torque	
		N・m	kgf・cm
B type	M5	5.8	60
C type	M6	9.8	100
D type	M8	19.6	200
E type	M10	39.2	400

3. Connection to the output shaft

Cautions

- When attaching a coupling, free, etc. onto the output shaft, make sure that excessive thrust load not be given to the output shaft.
- In case of strongly hitting the shaft with a hammer, the shaft inlet or the inside of the reducer may be damaged, therefore it shall be prohibited.
- If the shaft or key of a coupling to be attached is large, it may cause carbonization, so be careful when assembling.
- For assembling of a coupling, fix the key with a set bolt.
- When connecting the shaft, ensure that the connecting shaft fully goes out.

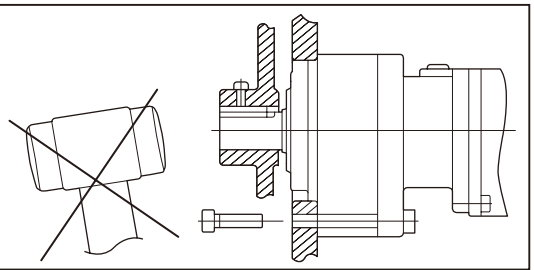

Model & Type Symbol

Compatible with large capacity motor **VRHF series**

Large type
Motor capacity up to **10 kW** acceptable
Newly emerging

Reduction ratio

1/4	1/20
1/5	1/25
1/7	1/28
1/9	1/35
1/16	1/45

Equipped with low noise helical gear

Flange combination saving spaces

Servicing not required with lubricating grease

High performances guaranteed in vulnerable conditions

Load strength improved to radial, thrust

Available even for an extended shaft.
Shaft combination also available.
(optional)

Low noise **Long life** **High strength**

■Type no.

ABLE REDUCER | Servo motor

VR H F - PB - 5 F - [ ] [ ] [ ]

- VR — Name of ABLE REDUCER
- H — High-torque spec. / Compatible with high-capacity servo
- F — Output mode / F : flange type S : extended shaft
- PB — Reducer spec. / PB : High precision type backlash 0.05° (3 min)
- 5 — Reduction ratio / 1step 4, 5, 7, 9
  2step 16, 20, 25, 28, 35, 45
- F — Reducer type no.(F type)
- [ ] — Applicable servo motor capacity(W)
- [ ] — Manufacturer name
- [ ] — Type No.

Series of servo motor makers

YASKAWA ELECTRIC	SGMSV (3000rpm) SGMDH (2000rpm) SGMGH (1500rpm) SGMGH (1000rpm)
SANYO DENKI	P20B (3000rpm) P80B (2000rpm) P60B (2000rpm) P60B (1500rpm)
MITSUBISHI LECTRIC	HC-RP (3000rpm) HF-SP (2000rpm) HF-SP (1000rpm)
PANASONIC	MSMA (3000rpm) MDMA (2000rpm)

※ Besides, other various servo motors are available. For more details, contact us.

Type No. Combination Table

■ Input speed : 3000rpm

Reduction ratio / Capacity(W)	1step reduction				2step reduction						Tamagawa Seiki	Yaskawa Electric	Mitsubishi Electric	Sanyo denki	Panasonic
	4	5	7	9	16	20	25	28	35	45	TBL-i Ⅱ	SGMSV	HC-RP	P20B, Q1	MSMA
800									■	■	○				
1000									■	■	○	○	○	○	○
1100						■	■	■	■	■	○				
1500						■	■	■	■	■	○	○	○	○	○
1600						■	■	■	■		○				
2000						■	■	■	■		○	○	○	○	○
2100					■	■	■	■			○				
2500					■	■	■	■				○		○	
3000					■	■	■					○		○	○
3500				■	■	■							○		
4000			■	■	■							○		○	○
5000	■	■	■									○	○	○	○

■ Input speed : 2000rpm

Reduction ratio / Capacity(W)	1step reduction				2step reduction						Yaskawa Electric	Mitsubishi Electric	Sanyo denki	Panasonic
	4	5	7	9	16	20	25	28	35	45	SGMDH	HF-SP	P60B, P80B	MDMA
750									■	■			○	
1000						■	■	■	■	■		○	○	○
1200						■	■	■	■				○	
1500						■	■	■				○	○	○
2000					■	■	■					○	○	○
2200				■	■	■					○			
2500			■	■	■	■							○	
3000		■	■	■	■								○	○
3200	■	■	■	■							○			
3500	■	■	■	■								○	○	
4000	■	■	■								○			○
4500	■	■	■										○	
5000	■	■										○		○
7000	■	■										○		

■ Input speed : 1500rpm

Reduction ratio / Capacity(W)	1step reduction				2step reduction						Yaskawa Electric	Sanyo denki
	4	5	7	9	16	20	25	28	35	45	SGMGH	P60B, Q1
450									■	■	○	
850						■	■	■	■		○	
1300					■	■	■	■			○	
1800			■	■	■	■					○	
2900	■	■	■								○	
4400	■	■									○	
4500	■	■										○
5500	■										○	○

■ Input speed : 1000rpm

Reduction ratio / Capacity(W)	1step reduction				2step reduction						Yaskawa Electric	Mitsubishi Electric
	4	5	7	9	16	20	25	28	35	45	SGMGH	HF-SP
300									■	■	○	
600						■	■	■	■		○	
850				■	■	■	■	■				○
900				■	■	■	■	■			○	
1200			■	■	■	■					○	○
2000	■	■	■								○	○
3000	■	■									○	○
4000	■	■									○	

Performance Table

■ Performance table If input speed is 3000rpm

Reduction ratio	Type				Output shaft speed	Standard output torque	Max. instantaneous output torque	Permissible radial load	Permissible thrust load	Max. permissible output torque
	Model	Reduction ratio	Type no.	Motor cap.	(rpm)	(N・m)	(N・m)	(N)	(N)	(N・m)
1/4	VRH □	-4	F	-5000	750	50.9	153	5880	2940	345
1/5	VRH □	-5	F	-5000	600	68.4	205	5880	2940	345
1/7	VRH □	-7	F	-4000	428	78.0	234	5880	2940	345
	VRH □	-7	F	-5000	428	100	301	5880	2940	345
1/9	VRH □	-S9	F	-3500	333	87.3	262	5880	2940	375
	VRH □	-S9	F	-4000	333	102	305	5880	2940	375
1/16	VRH □	-16	F	-2500	187	92.9	279	5880	2940	630
	VRH □	-16	F	-3000	187	118	355	5880	2940	630
	VRH □	-16	F	-3500	187	144	431	5880	2940	630
	VRH □	-16	F	-4000	187	169	508	5880	2940	630
1/20	VRH □	-20	F	-1500	150	62.0	186	5880	2940	660
	VRH □	-20	F	-2000	150	93.9	282	5880	2940	660
	VRH □	-20	F	-2500	150	126	377	5880	2940	660
	VRH □	-20	F	-3000	150	158	472	5880	2940	660
	VRH □	-20	F	-3500	150	189	568	5880	2940	660
1/25	VRH □	-25	F	-1500	120	83.5	251	5880	2940	660
	VRH □	-25	F	-2000	120	123	370	5880	2940	660
	VRH □	-25	F	-2500	120	163	489	5880	2940	660
	VRH □	-25	F	-3000	120	203	609	5880	2940	660
1/28	VRH □	-28	F	-1500	107	97.6	293	5880	2940	660
	VRH □	-28	F	-2000	107	142	426	5880	2940	660
	VRH □	-28	F	-2500	107	187	560	5880	2940	660
1/35	VRH □	-35	F	-1000	85	78.0	234	5880	2940	660
	VRH □	-35	F	-1500	85	134	401	5880	2940	660
	VRH □	-35	F	-2000	85	189	568	5880	2940	660
1/45	VRH □	-45	F	-1000	66	111	333	5880	2940	660
	VRH □	-45	F	-1500	66	183	548	5880	2940	660

※ For output torque, the numerical value may differ by series of the motor manufacturer.
※ Radial load applies to the case of jointing of the extended shaft(option).
※ In case of long-term successive operation, surface temperature of the servo motor increases, so please attach a fan for cooling.

■ Radial load

Radial load of the ABLE REDUCER(VRHF-□F) is limited to the case that the extended shaft(option) is attached, and based on the force given to the center of the extended shaft, permissible radial load is set. Calculate other radial load using the following equation and positive numbers.

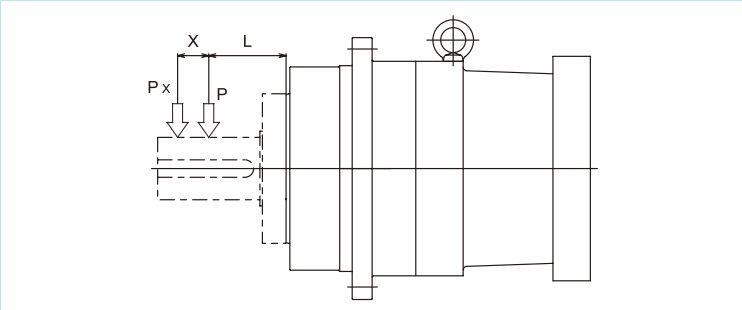

$$P_x = \{K / (K + X)\} \times P$$

P ：Permissible radial load(N)
L ：Positive number
K ：Positive number
X ：Load point displacement distance(mm)
Px：Permissible shaft load(N)

■ Performance table If input speed is 2000rpm

Reduction ratio	Type				Output shaft speed	Standard output torque	Max. instantaneous output torque	Permissible radial load	Permissible thrust load	Max. permissible output torque
	Model	Reduction ratio	Type no.	Motor cap.	(rpm)	(N・m)	(N・m)	(N)	(N)	(N・m)
1/4	VRH □	-4	F	-3200	500	44.9	135	5880	2940	540
	VRH □	-4	F	-3500	500	50.6	152	5880	2940	540
	VRH □	-4	F	-4000	500	60.1	180	5880	2940	540
	VRH □	-4	F	-4500	500	69.7	209	5880	2940	540
	VRH □	-4	F	-5000	500	79.2	238	5880	2940	540
	VRH □	-4	F	-7000	500	117	352	5880	2940	540
1/5	VRH □	-5	F	-3000	400	54.9	165	5880	2940	480
	VRH □	-5	F	-3200	400	59.7	179	5880	2940	480
	VRH □	-5	F	-3500	400	66.8	200	5880	2940	480
	VRH □	-5	F	-4000	400	78.7	236	5880	2940	480
	VRH □	-5	F	-4500	400	90.7	272	5880	2940	480
	VRH □	-5	F	-5000	400	103	308	5880	2940	480
	VRH □	-5	F	-7000	400	150	451	5880	2940	480
1/7	VRH □	-7	F	-2500	285	68.5	205	5880	2940	420
	VRH □	-7	F	-3000	285	85.2	256	5880	2940	420
	VRH □	-7	F	-3200	285	91.9	276	5880	2940	420
	VRH □	-7	F	-3500	285	102	306	5880	2940	420
	VRH □	-7	F	-4000	285	119	356	5880	2940	420
	VRH □	-7	F	-4500	285	135	406	5880	2940	420
1/9	VRH □	-S9	F	-2200	222	79.5	238	5880	2940	420
	VRH □	-S9	F	-2500	222	92.3	277	5880	2940	420
	VRH □	-S9	F	-3000	222	114	341	5880	2940	420
	VRH □	-S9	F	-3200	222	122	367	5880	2940	420
	VRH □	-S9	F	-3500	222	135	406	5880	2940	420
1/16	VRH □	-16	F	-2000	125	118	355	5880	2940	630
	VRH □	-16	F	-2200	125	134	401	5880	2940	630
	VRH □	-16	F	-2500	125	157	470	5880	2940	630
	VRH □	-16	F	-3000	125	195	584	5880	2940	630
1/20	VRH □	-20	F	-1000	100	59.7	179	5880	2940	660
	VRH □	-20	F	-1200	100	78.7	236	5880	2940	660
	VRH □	-20	F	-1500	100	107	322	5880	2940	660
	VRH □	-20	F	-2000	100	155	465	5880	2940	660
	VRH □	-20	F	-2200	100	174	523	5880	2940	660
	VRH □	-20	F	-2500	100	203	609	5880	2940	660
1/25	VRH □	-25	F	-1000	80	83.5	251	5880	2940	660
	VRH □	-25	F	-1200	80	107	322	5880	2940	660
	VRH □	-25	F	-1500	80	143	430	5880	2940	660
	VRH □	-25	F	-2000	80	203	609	5880	2940	660
1/28	VRH □	-28	F	-1000	71	97.6	293	5880	2940	660
	VRH □	-28	F	-1200	71	124	373	5880	2940	660
	VRH □	-28	F	-1500	71	164	493	5880	2940	660
1/35	VRH □	-35	F	-750	57	95.2	286	5880	2940	660
	VRH □	-35	F	-1000	57	137	411	5880	2940	660
	VRH □	-35	F	-1200	57	170	511	5880	2940	660
1/45	VRH □	-45	F	-750	44	129	387	5880	2940	660
	VRH □	-45	F	-1000	44	183	548	5880	2940	660

※ For output torque, the numerical value may differ by series of the motor manufacturer.
※ Radial load applies to the case of combination of the extended shaft(option).
※ In case of long-term successive operation, surface temperature of the servo motor increases, so please attach a fan for cooling.

Performance Table

■ Performance table If input speed is 1500rpm

Reduction ratio	Type				Output shaft speed	Standard output torque	Max. instantaneous output torque	Permissible radial load	Permissible thrust load	Max. permissible output torque
	Model	Reduction ratio	Type no.	Motor cap.	(rpm)	(N・m)	(N・m)	(N)	(N)	(N・m)
1/4	VRH □	-4	F	-2900	375	57.3	172	5880	2940	540
	VRH □	-4	F	-4400	375	95.5	286	5880	2940	540
	VRH □	-4	F	-4500	375	98.0	294	5880	2940	540
	VRH □	-4	F	-5500	375	123	370	5880	2940	540
1/5	VRH □	-5	F	-2900	300	76.4	229	5880	2940	480
	VRH □	-5	F	-4400	300	124	372	5880	2940	480
	VRH □	-5	F	-4500	300	127	382	5880	2940	480
1/7	VRH □	-7	F	-1800	214	64.6	194	5880	2940	420
	VRH □	-7	F	-2900	214	114	341	5880	2940	420
1/9	VRH □	-S9	F	-1800	166	88.8	266	5880	2940	420
1/16	VRH □	-16	F	-1300	93	94.2	283	5880	2940	660
	VRH □	-16	F	-1800	93	145	435	5880	2940	660
1/20	VRH □	-20	F	-850	75	70.0	210	5880	2940	660
	VRH □	-20	F	-1300	75	127	382	5880	2940	660
	VRH □	-20	F	-1800	75	191	573	5880	2940	660
1/25	VRH □	-25	F	-850	60	99.4	298	5880	2940	660
	VRH □	-25	F	-1300	60	171	513	5880	2940	660
1/28	VRH □	-28	F	-850	53	117	350	5880	2940	660
	VRH □	-28	F	-1300	53	197	591	5880	2940	660
1/35	VRH □	-35	F	-450	42	66.8	200	5880	2940	660
	VRH □	-35	F	-850	42	156	468	5880	2940	660
1/45	VRH □	-45	F	-450	33	96.6	290	5880	2940	660

■ Performance table If input speed is 1000rpm

Reduction ratio	Type				Output shaft speed	Standard output torque	Max. instantaneous output torque	Permissible radial load	Permissible thrust load	Max. permissible output torque
	Model	Reduction ratio	Type no.	Motor cap.	(rpm)	(N・m)	(N・m)	(N)	(N)	(N・m)
1/4	VRH □	-4	F	-2000	250	59.2	178	5880	2940	540
	VRH □	-4	F	-3000	250	97.4	292	5880	2940	540
	VRH □	-4	F	-4000	250	136	407	5880	2940	540
1/5	VRH □	-5	F	-2000	200	76.4	229	5880	2940	510
	VRH □	-5	F	-3000	200	124	372	5880	2940	510
	VRH □	-5	F	-4000	200	172	515	5880	2940	510
1/7	VRH □	-7	F	-1200	142	66.8	200	5880	2940	420
	VRH □	-7	F	-2000	142	120	361	5880	2940	420
1/9	VRH □	-S9	F	-850	111	60.1	180	5880	2940	420
	VRH □	-S9	F	-900	111	64.4	193	5880	2940	420
	VRH □	-S9	F	-1200	111	90.2	271	5880	2940	420
1/16	VRH □	-16	F	-850	62	95.5	286	5880	2940	660
	VRH □	-16	F	-900	62	103	309	5880	2940	660
	VRH □	-16	F	-1200	62	149	447	5880	2940	660
1/20	VRH □	-20	F	-600	50	80.2	241	5880	2940	660
	VRH □	-20	F	-850	50	128	384	5880	2940	660
	VRH □	-20	F	-900	50	137	412	5880	2940	660
	VRH □	-20	F	-1200	50	195	584	5880	2940	660
1/25	VRH □	-25	F	-600	40	111	333	5880	2940	660
	VRH □	-25	F	-850	40	171	512	5880	2940	660
	VRH □	-25	F	-900	40	183	548	5880	2940	660
1/28	VRH □	-28	F	-600	35	124	373	5880	2940	660
	VRH □	-28	F	-850	35	191	573	5880	2940	660
	VRH □	-28	F	-900	35	204	613	5880	2940	660
1/35	VRH □	-35	F	-300	28	70.2	210	5880	2940	660
	VRH □	-35	F	-600	28	170	511	5880	2940	660
1/45	VRH □	-45	F	-300	22	103	309	5880	2940	660

※ For output torque, the numerical value may differ by series of the motor manufacturer.
※ Radial load applies to the case of combination of the extended shaft(option).
※ In case of long-term successive operation, surface temperature of the servo motor increases, so please attach a fan for cooling. For output torque, the numerical value may differ by series of the motor manufacturer.

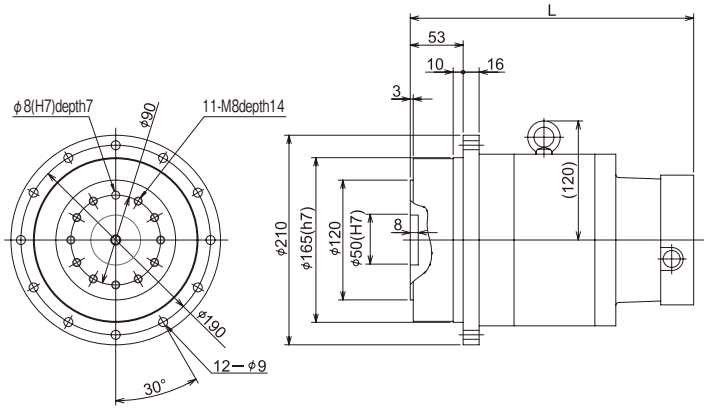

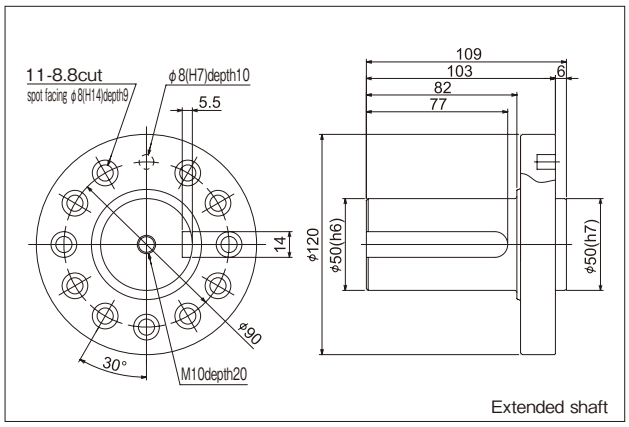

	Servo motor		Reduction ratio	ABLE REDUCER type	Size	Performance					
	Type	Output (W)			L	Output shaft speed	Rated output torque	Max. instantaneous output torque	Permissible radial load	Permissible thrust load	Max. permissible output torque
						(rpm)	(N・m)	(N・m)	(N)	(N)	(N・m)
Tamagawa Seiki TBL-ill 3000r/min series	TS4831	800	35	VRHF-PB-35F-800	279	85.7	55.7	150	5880	2940	660
			45	VRHF-PB-45F-800	279	66.6	82.4	223	5880	2940	660
	TS4813	1000	35	VRHF-PB-35F-1000	279	85.7	80.8	242	5880	2940	660
			45	VRHF-PB-45F-1000	279	66.6	115	345	5880	2940	660
	TS4832	1100	20	VRHF-PB-20F-1100	279	150	36.5	104	5880	2940	660
			25	VRHF-PB-25F-1100	279	120	51.7	147	5880	2940	660
			28	VRHF-PB-28F-1100	279	107	61.9	176	5880	2940	660
			35	VRHF-PB-35F-1100	279	85.7	89.0	254	5880	2940	660
			45	VRHF-PB-45F-1100	279	66.6	125	357	5880	2940	660
	TS4815	1500	20	VRHF-PB-20F-1500	279	150	62.4	187	5880	2940	660
			25	VRHF-PB-25F-1500	279	120	84.0	252	5880	2940	660
			28	VRHF-PB-28F-1500	279	107	98.1	294	5880	2940	660
			35	VRHF-PB-35F-1500	279	85.7	134	403	5880	2940	660
			45	VRHF-PB-45F-1500	279	66.6	183	550	5880	2940	660
	TS4833	1600	20	VRHF-PB-20F-1600	279	150	68.3	205	5880	2940	660
			25	VRHF-PB-25F-1600	279	120	91.4	274	5880	2940	660
			28	VRHF-PB-28F-1600	279	107	106	319	5880	2940	660
			35	VRHF-PB-35F-1600	279	85.7	144	434	5880	2940	660
	TS4817	2000	20	VRHF-PB-20F-2000	279	150	100	300	5880	2940	660
			25	VRHF-PB-25F-2000	279	120	131	395	5880	2940	660
			28	VRHF-PB-28F-2000	279	107	151	455	5880	2940	660
			35	VRHF-PB-35F-2000	279	85.7	202	606	5880	2940	660
	TS4844	2100	16	VRHF-PB-16F-2100	279	187	72.5	210	5880	2940	660
			20	VRHF-PB-20F-2100	279	150	100	291	5880	2940	660
			25	VRHF-PB-25F-2100	279	120	131	381	5880	2940	660
			28	VRHF-PB-28F-2100	279	107	150	438	5880	2940	660

※ Multiple corresponding servo motors exist beyond the above mentioned one. For more details, contact the nearest distributor.

Performance & Dimensional Drawing

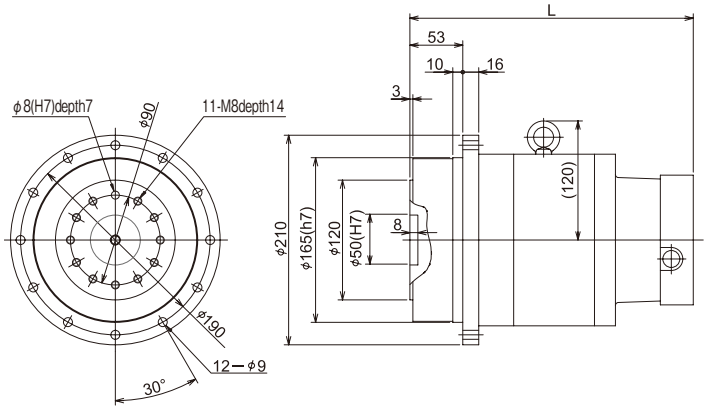

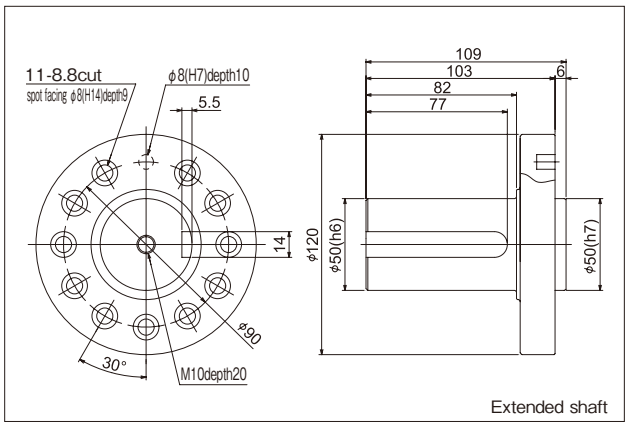

	Servo motor		Reduction ratio	ABLE REDUCER type	Size	Performance					
	Type	Output (W)			L	Output shaft speed (rpm)	Rated output torque (N・m)	Max. instantaneous output torque (N・m)	Permissible radial load (N)	Permissible thrust load (N)	Max. permissible output torque (N・m)
Sanyo Denki P60B 2000r/min series	P60B13100	1000	20	VRHF-PB-20F-1000	284	100	59.7	179	5880	2940	660
			25	VRHF-PB-25F-1000	284	80	83.5	251	5880	2940	660
			28	VRHF-PB-28F-1000	284	71.4	97.6	293	5880	2940	660
			35	VRHF-PB-35F-1000	284	57.1	137	411	5880	2940	660
			45	VRHF-PB-45F-1000	284	44.4	183	548	5880	2940	660
	P60B13150	1500	20	VRHF-PB-20F-1500	284	100	107	286	5880	2940	660
			25	VRHF-PB-25F-1500	284	80.0	143	382	5880	2940	660
			28	VRHF-PB-28F-1500	284	71.4	164	438	5880	2940	660
	P60B13200	2000	16	VRHF-PB-16F-2000	288	125	118	374	5880	2940	630
			20	VRHF-PB-20F-2000	288	100	155	490	5880	2940	660
			25	VRHF-PB-25F-2000	288	80.0	203	641	5880	2940	660
	P60B18200		16	VRHF-PB-16F-2000	307	125	118	374	5880	2940	630
			20	VRHF-PB-20F-2000	307	100	155	490	5880	2940	660
			25	VRHF-PB-25F-2000	307	80.0	203	641	5880	2940	660
	P60B15300	3000	5	VRHF-PB-5F-3000	220	400	54.9	167	5880	2940	480
			7	VRHF-PB-7F-3000	220	285	85.2	259	5880	2940	420
			9	VRHF-PB-S9F-3000	220	222	114	345	5880	2940	420
			16	VRHF-PB-16F-3000	283	125	195	591	5880	2940	630
	P60B18350	3500	4	VRHF-PB-4F-3500	230	500	47.7	140	5880	2940	540
			5	VRHF-PB-5F-3500	230	400	66.8	197	5880	2940	480
			7	VRHF-PB-7F-3500	230	285	102	300	5880	2940	420
			9	VRHF-PB-S9F-3500	230	222	135	398	5880	2940	420
	P60B18450	4500	4	VRHF-PB-4F-4500	230	500	66.8	218	5880	2940	540
			5	VRHF-PB-5F-4500	230	400	90.6	295	5880	2940	480
			7	VRHF-PB-7F-4500	230	285	135	441	5880	2940	420

	Servo motor		Reduction ratio	ABLE REDUCER type	Size	Performance					
	Type	Output (W)			L	Output shaft speed (rpm)	Rated output torque (N・m)	Max. instantaneous output torque (N・m)	Permissible radial load (N)	Permissible thrust load (N)	Max. permissible output torque (N・m)
Mitsubishi Electric HC-SP 2000r/min series	HC-SP102	1000	20	VRHF-PB-20F-1000	284	100	59.7	180	5880	2940	660
			25	VRHF-PB-25F-1000	284	80	83.5	252	5880	2940	660
			28	VRHF-PB-28F-1000	284	71.4	97.6	294	5880	2940	660
			35	VRHF-PB-35F-1000	284	57.1	137	413	5880	2940	660
			45	VRHF-PB-45F-1000	284	44.4	183	550	5880	2940	660
	HC-SP152	1500	20	VRHF-PB-20F-1500	284	100	107	324	5880	2940	660
			25	VRHF-PB-25F-1500	284	80.0	143	432	5880	2940	660
			28	VRHF-PB-28F-1500	284	71.4	164	496	5880	2940	660
	HC-SP202	2000	16	VRHF-PB-16F-2000	307	125	118	353	5880	2940	630
			20	VRHF-PB-20F-2000	307	100	155	463	5880	2940	660
			25	VRHF-PB-25F-2000	307	80.0	203	605	5880	2940	660
	HC-SP352	3500	4	VRHF-PB-4F-3500	245	500	47.7	143	5880	2940	540
			5	VRHF-PB-5F-3500	245	400	66.8	200	5880	2940	480
			7	VRHF-PB-7F-3500	245	285	102	306	5880	2940	420
			9	VRHF-PB-S9F-3500	245	222	135	406	5880	2940	420
	HC-SP502	5000	4	VRHF-PB-4F-5000	245	500	76.4	229	5880	2940	540
			5	VRHF-PB-5F-5000	245	400	103	307	5880	2940	480
	HC-SP702	7000	4	VRHF-PB-4F-7000	245	500	115	343	5880	2940	540
			5	VRHF-PB-5F-7000	245	400	150	450	5880	2940	480

※ Multiple corresponding servo motors exist beyond the above mentioned one. For more details, contact the nearest distributor.

Servo motor			Reduction ratio	ABLE REDUCER type	Size	Performance					
	Type	Output (W)			L	Output shaft speed	Rated output torque	Max. instantaneous output torque	Permissible radial load	Permissible thrust load	Max. permissible output torque
						(rpm)	(N・m)	(N・m)	(N)	(N)	(N・m)
Yaskawa Electric SGMGH 1500r/min series	SGMGH09A□A	850	20	VRHF-PB-20F-850	291	75.0	70.0	179	5880	2940	660
			25	VRHF-PB-25F-850	291	60.0	99.4	254	5880	2940	660
			28	VRHF-PB-28F-850	291	53.5	117	299	5880	2940	660
			35	VRHF-PB-35F-850	291	42.8	156	399	5880	2940	660
	SGMGH13A□A	1300	16	VRHF-PB-16F-1300	291	93.8	94.1	263	5880	2940	660
			20	VRHF-PB-20F-1300	291	75.0	127	355	5880	2940	660
			25	VRHF-PB-25F-1300	291	60.0	171	477	5880	2940	660
			28	VRHF-PB-28F-1300	291	53.5	197	550	5880	2940	660
	SGMGH20A□A	1800	7	VRHF-PB-7F-1800	245	214	64.6	181	5880	2940	420
			9	VRHF-PB-S9F-1800	245	167	88.8	222	5880	2940	420
			16	VRHF-PB-16F-1800	307	93.8	145	362	5880	2940	660
			20	VRHF-PB-20F-1800	307	75.0	191	476	5880	2940	660
	SGMGH30A□A	2900	4	VRHF-PB-4F-2900	245	375	56.0	136	5880	2940	540
			5	VRHF-PB-5F-2900	245	300	76.3	185	5880	2940	480
			7	VRHF-PB-7F-2900	245	214	114	275	5880	2940	420
	SGMGH44A□A	4400	4	VRHF-PB-4F-4400	245	375	94.1	236	5880	2940	540
			5	VRHF-PB-5F-4400	245	300	124	311	5880	2940	480
	SGMGH55A□A	5500	4	VRHF-PB-4F-5500	280	375	122	306	5880	2940	540

Servo motor			Reduction ratio	ABLE REDUCER type	Size	Performance					
	Type	Output (W)			L	Output shaft speed	Rated output torque	Max. instantaneous output torque	Permissible radial load	Permissible thrust load	Max. permissible output torque
						(rpm)	(N・m)	(N・m)	(N)	(N)	(N・m)
Sanyo Denki P60B 1500r/min series	P60B18550	5500	4	VRHF-PB-4F-5500	280	375	122	308	5880	2940	540
	P60B22550		4	VRHF-PB-4F-5500	285	375	122	314	5880	2940	540

Servo motor			Reduction ratio	ABLE REDUCER type	Size	Performance					
	Type	Output (W)			L	Output shaft speed	Rated output torque	Max. instantaneous output torque	Permissible radial load	Permissible thrust load	Max. permissible output torque
						(rpm)	(N・m)	(N・m)	(N)	(N)	(N・m)
Yaskawa Electric SGMGH 1000r/min series	SGMGH06A□B	600	20	VRHF-PB-20F-600	291	50.0	80.2	199	5880	2940	660
			25	VRHF-PB-25F-600	291	40.0	116	289	5880	2940	660
			28	VRHF-PB-28F-600	291	35.7	124	309	5880	2940	660
			35	VRHF-PB-35F-600	291	28.5	170	423	5880	2940	660
	SGMGH09A□B	900	9	VRHF-PB-S9F-900	227	111	64.4	144	5880	2940	420
			16	VRHF-PB-16F-900	291	62.5	103	231	5880	2940	660
			20	VRHF-PB-20F-900	291	50.0	137	308	5880	2940	660
			25	VRHF-PB-25F-900	291	40.0	183	409	5880	2940	660
			28	VRHF-PB-28F-900	291	35.7	204	458	5880	2940	660
	SGMGH12A□B	1200	7	VRHF-PB-7F-1200	245	142	66.8	163	5880	2940	420
			9	VRHF-PB-S9F-1200	245	111	90.2	220	5880	2940	420
			16	VRHF-PB-16F-1200	307	62.5	149	363	5880	2940	660
			20	VRHF-PB-20F-1200	307	50.0	195	474	5880	2940	660
	SGMGH20A□B	2000	4	VRHF-PB-4F-2000	245	250	57.3	132	5880	2940	540
			5	VRHF-PB-5F-2000	245	200	74.0	170	5880	2940	510
			7	VRHF-PB-7F-2000	245	142	120	277	5880	2940	420
	SGMGH30A□B	3000	4	VRHF-PB-4F-3000	245	250	95.4	214	5880	2940	540
			5	VRHF-PB-5F-3000	245	200	122	273	5880	2940	510
	SGMGH40A□B	4000	4	VRHF-PB-4F-4000	280	250	134	374	5880	2940	540
			5	VRHF-PB-5F-4000	280	200	169	474	5880	2940	510

※ Multiple corresponding servo motors exist beyond the above mentioned one. For more details, contact the nearest distributor.

The Most Compact Class in the World

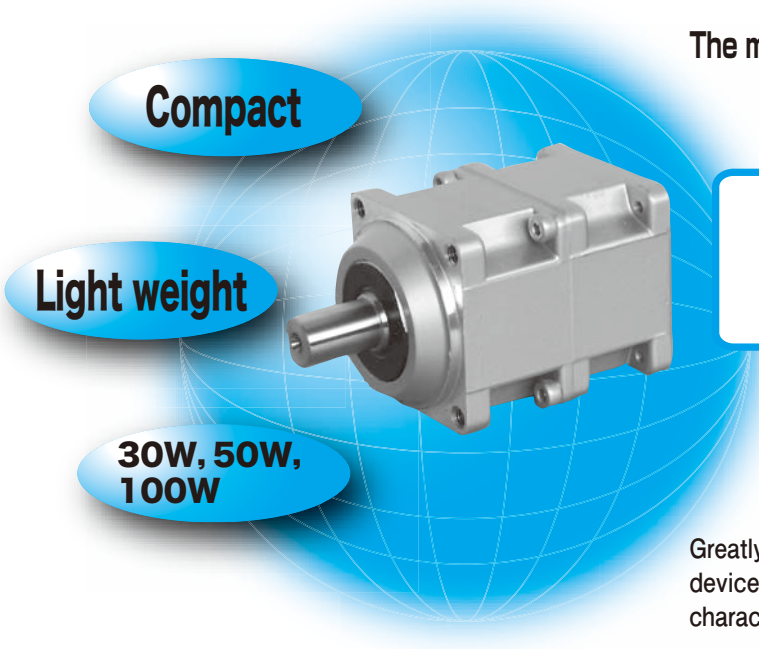

The most compact reducer realizing 40mm size

Able reducer
Compact type A

Greatly effective in making compact and lightweight devices and equipment, and at the same time, maximizes characteristics of the compact servo motor.

Reduction ratios of 1/3, 1/5, 1/9, 1/15, 1/25, 1/45, and 1/81, and combined motor capacities of 30W, 50W, and 100W into series

Backlash1°(60 min)

Model & type symbols

ABLE REDUCER | Servo motor

VR S F - 15 A - 50 - [ ] - [Please designate type no. of the motor manufacturer.]

- Type No.
- Manufacturer name
- Applicable servo motor capacity(W)
- Reducer type no. / A
- Reduction ratio / 1step: 3, 5, S9
  2step: 15, 25, 45, 81
  ※The reduction ratios are actual ones.
- Combination mode and output shaft direction / F : Flange-type free direction of combination
  D : D flange type free direction of combination
- Input type / S : Clamp fastening type (Motor shaft compatible irrespective of key slot <D-cut unavailable>)
- Name of ABLE REDUCER Backlash: 1° =60 minutes

■Type no.

Capacity(W) \ Reduction ratio	1step reduction			2step reduction			
	1/3	1/5	1/9	1/15	1/25	1/45	1/81
30W	A						
50W					–		
100W							

■Performance table

If input speed is 3000rpm

Reduction ratio	Type				Output speed	Permissible radial load	Permissible thrust load	Permissible output torque	Max. instantaneous permissible output torque
	Model	Reduction ratio	Type no.	Motor cap.	(rpm)	(N)	(N)	(N・m)	(N・m)
1/3	VR □ F	-3	A	-30	1000	196	98	1.0	2.9
	VR □ F	-3	A	-50					
	VR □ F	-3	A	-100					
1/5	VR □ F	-5	A	-30	600	235	118	1.6	4.8
	VR □ F	-5	A	-50					
	VR □ F	-5	A	-100					
1/9	VR □ F	S9	A	-30	333	314	157	1.4	4.3
	VR □ F	S9	A	-50					
1/15	VR □ F	-15	A	-30	200	412	206	2.4	7.2
	VR □ F	-15	A	-50					
1/25	VR □ F	-25	A	-30	120	470	235	2.4	7.2
1/45	VR □ F	-45	A	-30	66	470	235	2.4	7.2
1/81	VR □ F	-81	A	-30	37	470	235	2.4	7.2

■Dimensional drawing

● 1step reduction

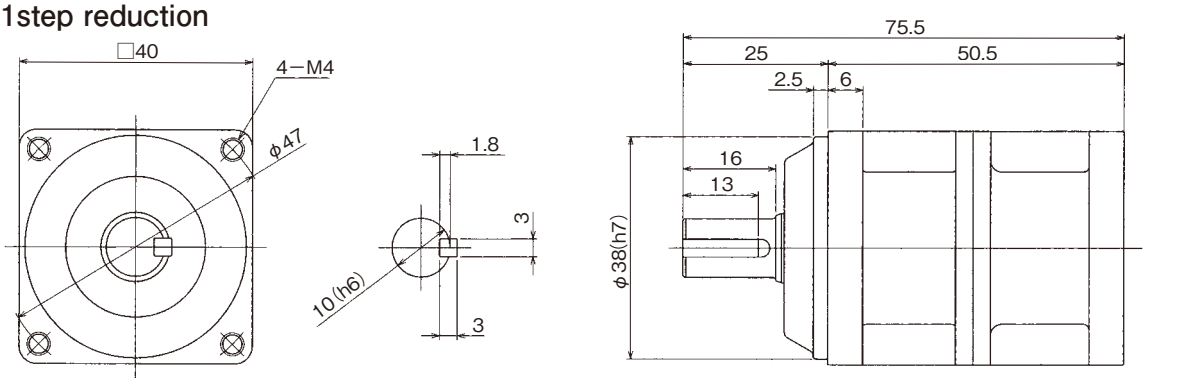

Weight : 310g (Unit:mm)

● 2step reduction

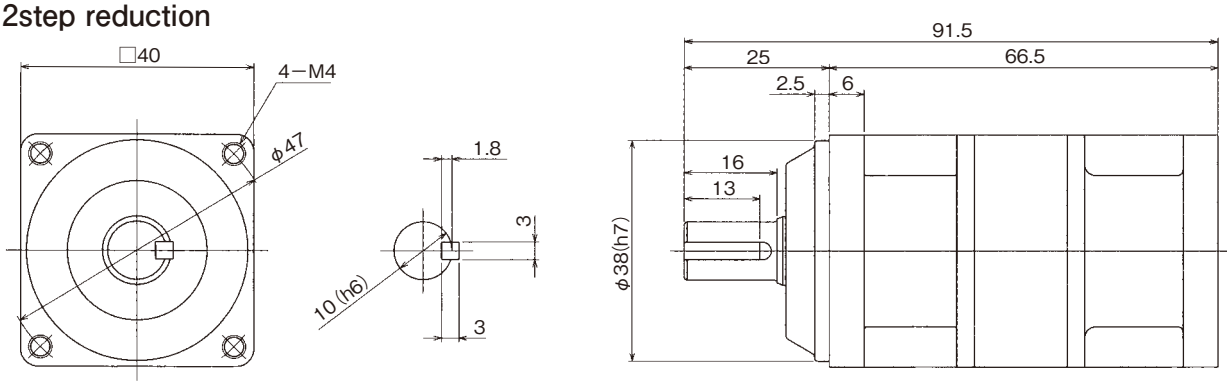

Weight : 410g (Unit:mm)

※For combination of motors, contact us.

‘Low noise’, ‘High strength’, and ‘High precision’
Precision reducer VRG series for servo motor

ABLE REDUCER that played a role in compact servo motor market development with low noise, compact size, and short-term delivery, and at the same time, ranked top in market share of reducers for servo motors in the field of general industries. ABLE above the ABLE appeared.
VRG series. This product used a cross roller bearing responding to high strength and high moment, making the main body gain high strength, and at the same time greatly increased permissible moment load. Up to about 17% noise reduction is realized compared to existing products through use and improvement of the helical gear.※In addition, compact size(space saving) and high precision are realized to cope with evolving servo motors. The output shaft is designed in flange mode, which enabled direct assembling of a driving unit onto the flange side of the output shaft and could reduce the whole length. 0.016° (1min) / 0.05° (3min) of backlash - ABLE above the ABLE, verbatim.

※Compared through our internal testing

Low noise

Using a planet gear reducer and a helical gear optimized to vibration and noise, low noise is realized with the merit maximized.

High strength

With the high-strength cross roller bearing used in the main axis, high output torque is displayed with compact size and increased strength of the main body.

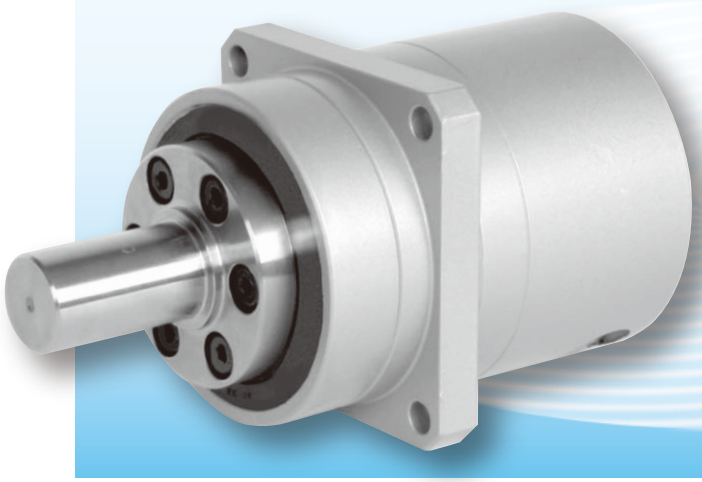

Reduction ratio		Type no.	Output spec.	Motor capacity
1/5	(1/3.67)	B60P	Flange output type	30W ～ 5000W
1/9	(1/4)	C90 (C90P)	Extended shaft output type	
1/11	(1/7)	D120		
1/15(15.4)	(1/10)	E170		
1/21	(1/20)			
1/33	(1/25)			
1/45	(1/35)			
1/81	(1/40)			
	(1/50)			
	(1/70)			
	(1/100)			

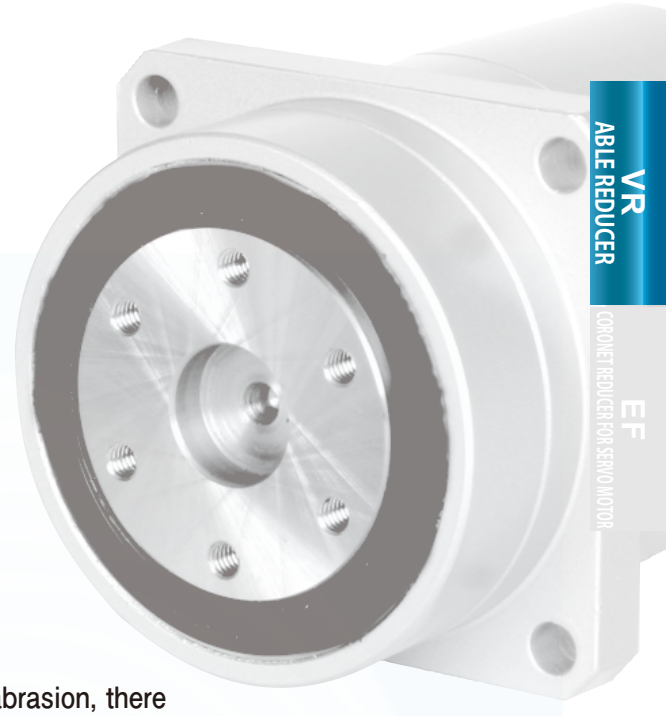

High precision

High precision series with backlash 0.016° (1min)/0.05° (3min). This reducer is characterized by a high-precision servo motor with a merit of precision positioning.
※0.016°

Compact

With a cross roller bearing in large diameter into series of flange output type. The degree of freedom of unit design is greatly improved with space saving.

Long life

With high-grade grease having excellent durability and little abrasion, there is no need of long-term refurbishing(about 20,000 hours).

Short-term delivery

Except the order date, short-term delivery is available to arrive at 7 days. We respond to customer's mind of 'I'd like to receive the product as soon as possible.'
※However, there are limitations in the range and conditions of response.

Free assembling position

All models are seal-filled and thus the combining and attaching position is free changeable.

Simple jointing

It is filled with a fixed amount of grease at release from the factory, so no additional lubrication is required once it is delivered to customers. Also, it is compatible with jointing of series of servo motors of each supplier, therefore jointing of motor with reducer is simple.
※The motor-combined flange and shaft diameter of a reducer may differ according to dimensions, therefore jointing may not be available for other motors except designated ones, in some cases. Use for the servo motor designated at ordering, certainly.

Model & Type Symbols

Model & type symbols

ABLE REDUCER | Servo motor

VR G F - 11 C90 - ☐ - ☐ - ☐ - ☐

- Type No.
- Manufacturer name
- Applicable servo motor capacity (W)
- N : Backlash 1 minute, No : Backlash 3 minutes
  For backlash 1 min spec., contact us in advance.
- Reducer type no. : B60P C90(C90P) D120 E170
- Reducer : 3.67, 4, 5, 7, 9, 10, 11, 15 (※15.4), 20, 21, 25, 33, 35, 40, 45, 50, 70, 81, 100
  The reduction ratios are actual ones. (15.4 for C90, D120, and E170 15.4)
- Output mode : F - flange output type, S - extended shaft output type
- Precision reducer series Backlash 1 min (0.016°), Backlash 3 min (0.05°)
- Name of ABLE REDUCER for servo motor

Reduction ratio & type no.

■ Input speed 3000rpm

B60P | C90 | C90P | D120 | E170

Capacity (W)	※1 Reduction ratio(1step type)						※2 Reduction ratio(2step type)												
	★1/3.67	★1/4	1/5	★1/7	1/9	★1/10	1/11	1/15 1/15.4	★1/20	1/21	★1/25	1/33	★1/35	★1/40	1/45	★1/50	★1/70	1/81	★1/100
30																			
50																			
100																			
200																			
400																			
750																			
1000																			
1500																			
2000																			
2500																			
3000																			
3500																			
4000																			
4500																			
5000																			

※1 1/3.67 indicates 3/11 = 1/3.666…
※2 1/15 for B type, 1/15.4 for C~E types

■ Input speed 3000rpm

Rated number of revolutions of motor	Reducer type no.	Reduction ratio	Permissible output torque ※1	Maxi. permissible output torque ※2	Max. output torque at emergency ※3	Mean permissible input number of revolutions ※4	Max permissible input number of revolutions ※5	Rough weight kg		Permissible radial load N		Permissible thrust load ※8	Permissible moment ※9
								Flange	Output shaft	Flange ※6	Output shaft ※7		
min^{-1}			N·m	N·m	N·m	min^{-1}	min^{-1}					N	Nm
3000	B60P	3.67	6.82	24.8	49.6	3000	6000	1.1	1.2	553	202	826	38
		4	7.16	27.0	54.1					568	207	846	
		5	7.87	27.0	54.1					607	221	906	
		7	9.29	25.7	51.3					672	245	927	
		9	10.5	23.7	47.3					724	264	927	
		10	10.8	21.6	43.3			1.2	1.3	747	272	927	
		11	9.43	26.4	52.7					769	280	927	
		15	10.9	27.2	57.5					844	308	927	
		20	11.5	26.8	53.7					920	335	927	
		21	12.0	28.8	57.5					934	340	927	
		25	12.7	28.8	57.5					984	359	927	
		33	13.1	26.4	52.7					1070	390	927	
		35	13.0	25.9	51.8					1090	397	927	
		40	13.4	26.8	53.7					1130	413	927	
		45	14.4	28.8	57.5					1170	428	927	
		50	14.4	28.8	57.5					1210	442	927	
		70	13.0	25.9	51.8					1340	488	927	
		81	11.8	23.6	47.2					1400	510	927	
		100	10.8	21.6	43.1					1490	544	927	
	C90	3.67	21.7	92.6	185	3000	6000	2.3	2.7	1070	448	1590	138
		4	22.5	101	202					1090	460	1630	
		5	24.6	106	212					1170	491	1750	
		7	28.6	101	203					1290	544	1930	
		9	32.4	81.9	164					1400	586	2080	
		10	34.1	73.1	146					1440	605	2150	
		11	23.2	81.8	164			2.9	3.3	1480	622	2210	
		15.4	33.2	110	220					1640	689	2450	
		20	36.2	116	232					1770	745	2650	
		21	37.7	123	246					1800	756	2650	
		25	39.7	123	246					1900	796	2650	
		33	41.7	110	220					2060	865	2650	
		35	46.1	103	207					2100	881	2650	
		40	44.6	116	232					2180	917	2650	
		45	47.3	123	246					2260	950	2650	
		50	48.8	123	246					2330	980	2650	
		70	50.3	101	201					2580	1080	2650	
	C90P	81	40.8	81.7	163					2700	1130	2650	
		100	36.4	72.9	146					2870	1210	2650	
3000	D120	3.67	71.9	255	511	3000	4200	6.7	8.1	1860	700	2780	360
		4	74.7	262	524					1910	718	2850	
		5	82.6	295	589		6000			2040	768	3050	
		7	96.5	240	480					2260	850	3370	
		9	96.0	192	384					2440	916	3640	
		10	80.8	162	323					2510	946	3740	
		11	60.5	206	411			8.4	9.8	2590	973	3740	
		15.4	110	285	570					2860	1080	3740	
		20	120	292	585					3100	1160	3740	
		21	126	318	635					3140	1180	3740	
		25	133	318	635					3310	1240	3740	
		33	138	285	570					3600	1350	3740	
		35	132	265	529					3660	1380	3740	
		40	146	292	585					3810	1430	3740	
		45	159	318	635					3950	1480	3740	
		50	159	318	635					4070	1530	3740	
		70	132	265	529					4510	1700	3740	
		81	95.7	191	383					4710	1770	3740	
		100	80.6	161	322					5020	1890	3740	
2000	E170	3.67	174	669	1340	2000	3000	16	19	4170	1750	6230	1037
		4	187	644	1290					4280	1790	6400	
		5	202	639	1280		4200			4580	1920	6840	
		7	245	578	1160					5070	2120	7560	
		9	200	400	801					5470	2290	8160	
		10	199	398	796					5640	2360	8420	
		11	170	501	1000			20	23	5800	2430	8660	
		15.4	266	702	1400					6420	2690	9580	
		20	301	715	1410					6940	2910	10400	
		21	309	710	1420					7050	2950	10500	
		25	326	710	1420					7430	3110	10800	
		33	335	765	1530					8070	3380	10800	
		35	316	632	1260					8210	3440	10800	
		40	358	715	1430					8550	3580	10800	
		45	355	710	1420		5000			8860	3710	10800	
		50	355	710	1420					9140	3830	10800	
		70	316	632	1260					10100	4230	10800	
		81	200	399	798					10600	4420	10800	
		100	198	397	793					11300	4710	10800	

※1 Permissible output torque is a numerical value in 20000 hours of life time.
※2 Max. permissible output torque is a numerical value permissible at starting and stopping.
※3 Max. output torque at emergency is a permissible numerical value when impact is given.(up to 1,000 times)
※4 Mean permissible input number of revolutions is the maximum numerical value of mean input number of revolutions during operation.
※5 Max. permissible input number of revolutions is the maximum input number of revolutions under conditions of no successive operation.
※6 Permissible radial load(flange) is a numerical value acting on the cross roller axis(thrust load zero).
※7 Permissible radial load(output shaft) is a numerical value acting on the center of the output shaft(thrust load zero).
※8 Permissible thrust load is a numerical value acting on the center of the output shaft(radial load zero).
※9 Permissible moment is the permissible maximum numerical value.

Output Torque & Moment of Inertia (B60P・C90/C90P)

■ Input speed 3000rpm(B60P)

※ 1 type				Output shaft speed	※ 2 rated output torque	※ 3 max. instantaneous time output torque	Moment of inertia×10^{-4} kgm^2	
Model	Reduction ratio	Type no.	Motor cap.	rpm	Nm	Nm	Flange	Output shaft
VRG □	5	B60P	50	600	0.255	0.764	0.0494	0.0551
VRG □	5	B60P	100	600	0.986	2.96	0.0494	0.055
VRG □	5	B60P	200	600	2.55	7.64	0.127	0.1331
VRG □	5	B60P	400	600	5.60	16.8	0.127	0.133
VRG □	9	B60P	50	333	0.659	1.98	0.0349	0.0366
VRG □	9	B60P	100	333	2.12	6.36	0.0349	0.0366
VRG □	9	B60P	200	333	4.81	14.4	0.113	0.114
VRG □	9	B60P	400	333	10.3	23.7	0.113	0.114
VRG □	11	B60P	50	273	0.525	1.57	0.0752	0.0764
VRG □	11	B60P	100	273	2.10	6.30	0.0752	0.0764
VRG □	11	B60P	200	273	5.46	16.4	0.154	0.155
VRG □	15	B60P	50	273	1.38	4.15	0.0731	0.0738
VRG □	15	B60P	100	273	3.63	10.9	0.0731	0.0738
VRG □	15	B60P	200	273	8.02	24.1	0.152	0.152
VRG □	21	B60P	50	143	2.67	8.02	0.0482	0.0485
VRG □	21	B60P	100	143	5.88	17.6	0.0482	0.0485
VRG □	21	B60P	200	143	12.0	28.8	0.126	0.126
VRG □	33	B60P	50	91	4.20	12.6	0.0330	0.0331
VRG □	33	B60P	100	91	9.24	26.4	0.0330	0.0331
VRG □	45	B60P	50	67	5.44	16.3	0.0327	0.0328
VRG □	45	B60P	100	67	11.7	28.8	0.0327	0.0328
VRG □	81	B60P	30	37	5.10	15.3	0.0326	0.0326
VRG □	81	B60P	50	37	9.79	23.6	0.0326	0.0326

■ Input speed 3000rpm(C90/C90P)

※ 1 type				Output shaft speed	※ 2 rated output torque	※ 3 max. instantaneous time output torque	Moment of inertia×10^{-4} kgm^2	
Model	Reduction ratio	Type no.	Motor cap.	rpm	Nm	Nm	Flange	Output shaft
VRG □	5	C90	400	600	4.71	14.1	0.359	0.396
VRG □	5	C90	750	600	10.3	30.8	0.663	0.701
VRG □	5	C90	1000	600	14.0	42.0	1.80	1.84
VRG □	5	C90	1500	600	22.0	65.9	1.80	1.84
VRG □	9	C90	200	333	4.24	12.7	0.250	0.261
VRG □	9	C90	400	333	9.62	28.9	0.250	0.261
VRG □	9	C90	750	333	19.3	58.0	0.554	0.566
VRG □	9	C90	1000	333	26.3	79.0	1.69	1.70
VRG □	11	C90	200	273	5.04	15.1	0.429	0.437
VRG □	11	C90	400	273	11.5	34.4	0.429	0.437
VRG □	11	C90	750	273	23.1	69.3	0.701	0.708
VRG □	15.4	C90	200	195	8.04	24.1	0.342	0.346
VRG □	15.4	C90	400	195	17.2	51.7	0.342	0.346
VRG □	15.4	C90	750	195	33.2	101	0.613	0.617
VRG □	21	C90	200	143	11.0	32.9	0.333	0.335
VRG □	21	C90	400	143	23.5	70.6	0.333	0.335
VRG □	33	C90	100	91	7.77	23.3	0.0619	0.0627
VRG □	33	C90	200	91	17.6	52.9	0.235	0.236
VRG □	33	C90	400	91	37.0	110	0.235	0.236
VRG □	45	C90	100	67	10.6	31.8	0.0601	0.0605
VRG □	45	C90	200	67	24.1	72.2	0.233	0.234
VRG □	45	C90	400	67	47.3	123	0.233	0.234
VRG □	81	C90P	50	37	7.47	22.4	0.0336	0.0336
VRG □	81	C90P	100	37	19.6	58.8	0.0336	0.0336
VRG □	81	C90P	200	37	40.8	81.7	0.112	0.112

※ Some models may require torque limitation. For more details, contact the nearest distributor.
※ The rated output torque indicates output torque of the reducer at rated motor torque.
※ The max. instantaneous time output torque indicates output torque of the reducer upon onset of max. instantaneous time torque of the motor, assuming that max. instantaneous time torque of the motor is 3 times of rated torque.
If max. instantaneous time torque of the motor is not 3 times of rated torque, consult with us in advance.
※ For details beyond the above-mentioned reduction ratio, contact the nearest distributor.

Output Torque & Moment of Inertia(D120)

■ Input speed 3000rpm (D120)

※ 1 type				Output shaft speed	※ 2 rated output torque	※ 3 max. instantaneous time output torque	Moment of inertia × 10^{-4} kgm^2	
Model	Reduction ratio	Type no.	Motor cap.	rpm	Nm	Nm	Flange	Output shaft
VRG □	5	D120	1000	600	12.1	36.3	2.51	2.72
VRG □	5	D120	1500	600	20.0	60.1	2.51	2.72
VRG □	5	D120	2000	600	28.0	84.0	2.51	2.72
VRG □	5	D120	2500	600	35.8	107	2.51	2.72
VRG □	5	D120	3000	600	43.0	129	4.12	4.33
VRG □	5	D120	3500	600	51.2	154	4.12	4.33
VRG □	5	D120	4000	600	58.5	176	4.12	4.33
VRG □	5	D120	4500	600	65.9	198	4.12	4.33
VRG □	5	D120	5000	600	73.2	220	4.12	4.33
VRG □	9	D120	750	333	17.6	52.8	1.04	1.11
VRG □	9	D120	1000	333	24.6	73.9	2.05	2.12
VRG □	9	D120	1500	333	37.8	113	2.05	2.12
VRG □	9	D120	2000	333	51.5	155	2.05	2.12
VRG □	9	D120	2500	333	65.9	192	2.05	2.12
VRG □	9	D120	3000	333	79.0	192	3.66	3.73
VRG □	9	D120	3500	333	92.2	192	3.66	3.73
VRG □	11	D120	750	273	19.9	59.8	1.77	1.82
VRG □	11	D120	1000	273	28.7	86.1	2.81	2.86
VRG □	11	D120	1500	273	45.1	135	2.81	2.86
VRG □	11	D120	2000	273	60.5	185	2.81	2.86
VRG □	15.4	D120	750	195	30.9	92.6	1.47	1.49
VRG □	15.4	D120	1000	195	43.1	129	2.51	2.53
VRG □	15.4	D120	1500	195	66.1	198	2.51	2.53
VRG □	15.4	D120	2000	195	88.2	265	2.51	2.53
VRG □	15.4	D120	2500	195	110	285	2.51	2.53
VRG □	21	D120	750	143	42.1	126	1.43	1.45
VRG □	21	D120	1000	143	58.8	176	2.47	2.48
VRG □	21	D120	1500	143	90.2	271	2.47	2.48
VRG □	21	D120	2000	143	120	318	2.47	2.48
VRG □	33	D120	400	91	34.4	103	0.345	0.350
VRG □	33	D120	750	91	69.3	208	0.941	0.946
VRG □	33	D120	1000	91	94.5	283	1.86	1.86
VRG □	33	D120	1500	91	138	285	1.86	1.86
VRG □	45	D120	400	67	47.0	141	0.338	0.341
VRG □	45	D120	750	67	94.5	283	0.934	0.936
VRG □	45	D120	1000	67	129	318	1.85	1.85
VRG □	81	D120	200	37	42.3	127	0.235	0.236
VRG □	81	D120	400	37	88.7	191	0.235	0.236

※ Some models may require torque limitation. For more details, contact the nearest distributor.
※ The rated output torque indicates output torque of the reducer at rated motor torque.
※ The max. instantaneous time output torque indicates output torque of the reducer upon onset of max. instantaneous time torque of the motor, assuming that max. instantaneous time torque of the motor is 3 times of rated torque.
If max. instantaneous time torque of the motor is not 3 times of rated torque, consult with us in advance.
※ For details beyond the above-mentioned reduction ratio, contact the nearest distributor.

Output Torque & Moment of Inertia(E170)

■ Input speed 3000rpm(E170)

※ 1 type				Output shaft speed	※ 2 rated output torque	※ 3 max. instantaneous time output torque	Moment of inertia×10^{-4} kgm^2	
Model	Reduction ratio	Type no.	Motor cap.	rpm	Nm	Nm	Flange	Output shaft
VRG □	5	E170	3000	400	39.1	117	7.67	8.87
VRG □	5	E170	3500	400	46.8	140	7.67	8.87
VRG □	5	E170	4000	400	54.7	164	7.67	8.87
VRG □	5	E170	4500	400	61.6	185	7.67	8.87
VRG □	5	E170	5000	400	70.0	210	7.67	8.87
VRG □	9	E170	1000	222	20.6	61.9	3.75	4.12
VRG □	9	E170	1500	222	34.4	103	3.75	4.12
VRG □	9	E170	2000	222	48.1	144	3.75	4.12
VRG □	9	E170	2500	222	61.6	185	3.75	4.12
VRG □	9	E170	3000	222	75.6	227	4.96	5.33
VRG □	9	E170	3500	222	90.2	271	4.96	5.33
VRG □	9	E170	4000	222	103	309	4.96	5.33
VRG □	9	E170	4500	222	116	348	4.96	5.33
VRG □	9	E170	5000	222	132	395	4.96	5.33
VRG □	11	E170	1000	182	20.3	60.9	6.94	7.18
VRG □	11	E170	1500	182	36.7	110	6.94	7.18
VRG □	11	E170	2000	182	53.2	160	6.94	7.18
VRG □	11	E170	2500	182	70.0	210	6.94	7.18
VRG □	11	E170	3000	182	86.1	258	8.12	8.37
VRG □	11	E170	3500	182	103	309	8.12	8.37
VRG □	11	E170	4000	182	120	361	8.12	8.37
VRG □	11	E170	4500	182	135	406	8.12	8.37
VRG □	11	E170	5000	182	151	462	8.12	8.37
VRG □	15.4	E170	1000	130	34.3	103	5.25	5.37
VRG □	15.4	E170	1500	130	57.3	172	5.25	5.37
VRG □	15.4	E170	2000	130	80.4	241	5.25	5.37
VRG □	15.4	E170	2500	130	103	309	5.25	5.37
VRG □	15.4	E170	3000	130	126	379	6.43	6.55
VRG □	15.4	E170	3500	130	151	453	6.43	6.55
VRG □	15.4	E170	4000	130	172	517	6.43	6.55
VRG □	15.4	E170	4500	130	198	595	6.43	6.55
VRG □	15.4	E170	5000	130	220	661	6.43	6.55
VRG □	21	E170	1000	95.2	46.8	140	5.04	5.11
VRG □	21	E170	1500	95.2	78.2	235	5.04	5.11
VRG □	21	E170	2000	95.2	110	329	5.04	5.11
VRG □	21	E170	2500	95.2	140	421	5.04	5.11
VRG □	21	E170	3000	95.2	172	517	6.23	6.29
VRG □	21	E170	3500	95.2	206	617	6.23	6.29
VRG □	21	E170	4000	95.2	235	706	6.23	6.29
VRG □	21	E170	4500	95.2	271	710	6.23	6.29
VRG □	33	E170	750	61	56.7	170	1.46	1.49
VRG □	33	E170	1000	61	81.9	246	3.11	3.14
VRG □	33	E170	1500	61	132	397	3.11	3.14
VRG □	33	E170	2000	61	181	542	3.11	3.14
VRG □	33	E170	2500	61	231	693	3.11	3.14
VRG □	33	E170	3000	61	283	765	4.11	4.14
VRG □	45	E170	750	44	77.3	232	1.42	1.43
VRG □	45	E170	1000	44	112	335	3.07	3.08
VRG □	45	E170	1500	44	180	541	3.07	3.08
VRG □	45	E170	2000	44	246	710	3.07	3.08
VRG □	45	E170	2500	44	315	710	3.07	3.08
VRG □	81	E170	400	25	78.3	235	0.348	0.353
VRG □	81	E170	750	25	162	399	0.964	0.969

※ Some models may require torque limitation. For more details, contact the nearest distributor.
※ The rated output torque indicates output torque of the reducer at rated motor torque.
※ The max. instantaneous time output torque indicates output torque of the reducer upon onset of max. instantaneous time torque of the motor, assuming that max. instantaneous time torque of the motor is 3 times of rated torque.
If max. instantaneous time torque of the motor is not 3 times of rated torque, consult with us in advance.
※ For details beyond the above-mentioned reduction ratio, contact the nearest distributor.

■Reducer type no. : B60P

◆ Flange output type (VRGF)

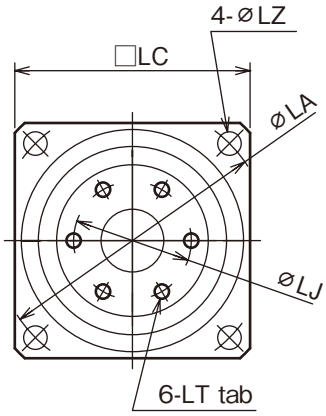

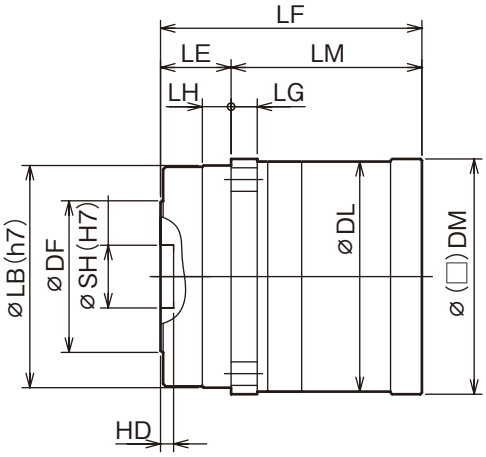

◆ Extended shaft output type (VRGS)

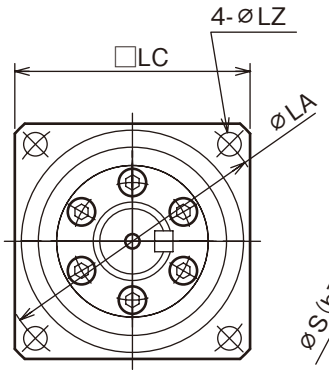

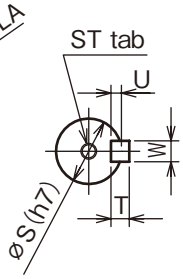

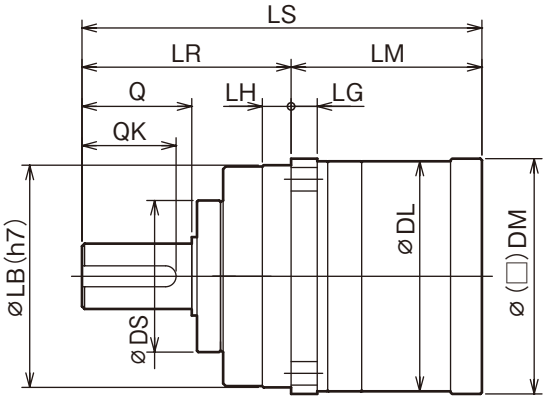

■ Dimensional table

Type				Common dimensions									Flange type (VRGF)							Output shaft type (VRGS)									
Model	Reduction ratio	Type no.	Cap.	LA	LB	LC	LZ	LG	LH	LM	DL	DM	LE	LF	DF	SH	HD	LJ	LT	LR	LS	Q	DS	S	ST	W	T	U	QK
VRG □	3.67・4・5・7・9・10	B60P	50	70	56	60	5.5	8	6.5	42.5	59	59	21	63.5	38	14	5	30	M4 depth 7	58	100.5	28	39	16	M4 depth 8	5	5	3	25
VRG □	3.67・4・5・7・9・10	B60P	100	70	56	60	5.5	8	6.5	42.5	59	59	21	63.5	38	14	5	30	M4 depth 7	58	100.5	28	39	16	M4 depth 8	5	5	3	25
VRG □	3.67・4・5・7・9・10	B60P	200	70	56	60	5.5	8	6.5	50.5	59	□60	21	71.5	38	14	5	30	M4 depth 7	58	108.5	28	39	16	M4 depth 8	5	5	3	25
VRG □	3.67・4・5・7・9	B60P	400	70	56	60	5.5	8	6.5	50.5	59	□60	21	71.5	38	14	5	30	M4 depth 7	58	108.5	28	39	16	M4 depth 8	5	5	3	25
VRG □	70・81・100	B60P	30	70	56	60	5.5	8	6.5	60	59	59	21	81	38	14	5	30	M4 depth 7	58	118	28	39	16	M4 depth 8	5	5	3	25
VRG □	11・15・20・21・25・33 35・40・45・50・70・81	B60P	50	70	56	60	5.5	8	6.5	60	59	59	21	81	38	14	5	30	M4 depth 7	58	118	28	39	16	M4 depth 8	5	5	3	25
VRG □	11・15・20・21・25・33 35・40・45・50	B60P	100	70	56	60	5.5	8	6.5	60	59	59	21	81	38	14	5	30	M4 depth 7	58	118	28	39	16	M4 depth 8	5	5	3	25
VRG □	11・15・20・21	B60P	200	70	56	60	5.5	8	6.5	68	59	□60	21	89	38	14	5	30	M4 depth 7	58	126	28	39	16	M4 depth 8	5	5	3	25

Dimension Drawing & Table

■Reducer type no. : C90(C90P)

◆Extended shaft output type (VRGF)

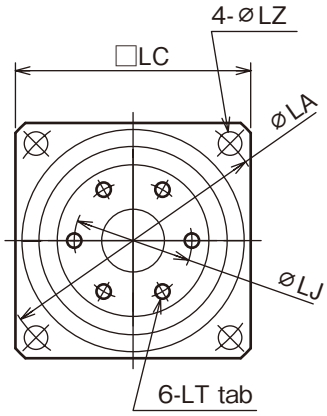

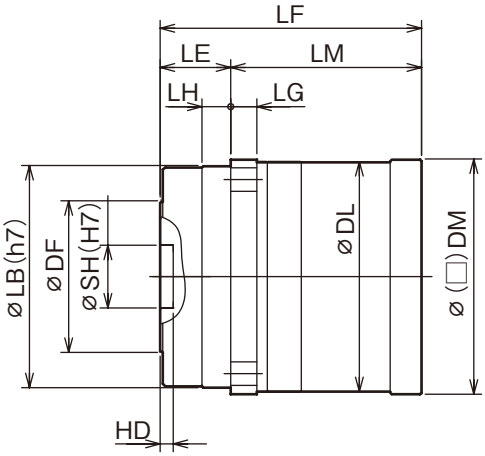

◆Extended shaft output type (VRGS)

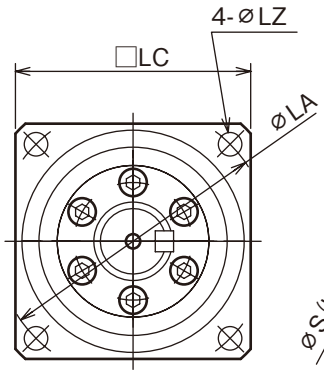

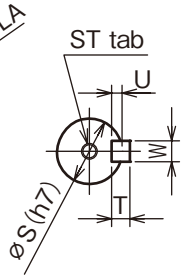

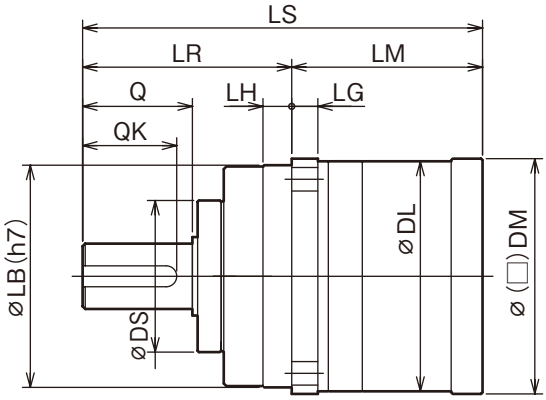

■ Dimensional table

Type				Common dimensions									Flange type (VRGF)							Output shaft type (VRGS)									
Model	Reduction ratio	Type no.	Cap.	LA	LB	LC	LZ	LG	LH	LM	DL	DM	LE	LF	DF	SH	HD	LJ	LT	LR	LS	Q	DS	S	ST	W	T	U	QK
VRG □	7・9・10	C90	200	105	85	90	9	10	11	51	88	88	27	78	58	24	5	45	M6 depth 10	80	131	42	58	25	M6 depth 12	8	7	4	36
VRG □	3.67・4・5・7・9・10	C90	400	105	85	90	9	10	11	51	88	88	27	78	58	24	5	45	M6 depth 10	80	131	42	58	25	M6 depth 12	8	7	4	36
VRG □	3.67・4・5・7・9・10	C90	750	105	85	90	9	10	11	65	88	□90	27	92	58	24	5	45	M6 depth 10	80	145	42	58	25	M6 depth 12	8	7	4	36
VRG □	3.67・4・5・7・9・10	C90	1000	105	85	90	9	10	11	74	88	□100	27	101	58	24	5	45	M6 depth 10	80	154	42	58	25	M6 depth 12	8	7	4	36
VRG □	3.67・4・5	C90	1500	105	85	90	9	10	11	74	88	□100	27	101	58	24	5	45	M6 depth 10	80	154	42	58	25	M6 depth 12	8	7	4	36
VRG □	3.67	C90	2000	105	85	90	9	10	11	74	88	□100	27	101	58	24	5	45	M6 depth 10	80	154	42	58	25	M6 depth 12	8	7	4	36
VRG □	33・40・45・50・70	C90	100	105	85	90	9	10	11	66	88	68	27	93	58	24	5	45	M6 depth 10	80	146	42	58	25	M6 depth 12	8	7	4	36
VRG □	11・15.4・20・21・25・33 35・40・45・50・70	C90	200	105	85	90	9	10	11	73	88	88	27	100	58	24	5	45	M6 depth 10	80	153	42	58	25	M6 depth 12	8	7	4	36
VRG □	11・15.4・20・21・25・33 35・40・45	C90	400	105	85	90	9	10	11	73	88	88	27	100	58	24	5	45	M6 depth 10	80	153	42	58	25	M6 depth 12	8	7	4	36
VRG □	11・15.4	C90	750	105	85	90	9	10	11	81	88	□90	27	108	58	24	5	45	M6 depth 10	80	161	42	58	25	M6 depth 12	8	7	4	36
VRG □	81・100	C90P	50	105	85	90	9	10	11	63	88	68	27	90	58	24	5	45	M6 depth 10	80	143	42	58	25	M6 depth 12	8	7	4	36
VRG □	81・100	C90P	100	105	85	90	9	10	11	63	88	68	27	90	58	24	5	45	M6 depth 10	80	143	42	58	25	M6 depth 12	8	7	4	36
VRG □	81	C90P	200	105	85	90	9	10	11	71	88	88	27	98	58	24	5	45	M6 depth 10	80	151	42	58	25	M6 depth 12	8	7	4	36

■Reducer type no. : D120

◆ Flange output type (VRGF)

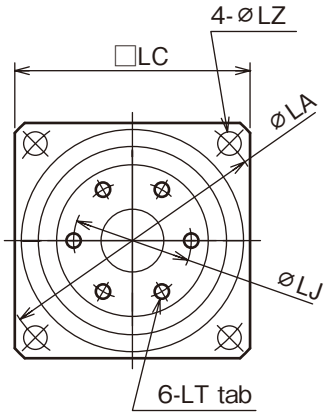

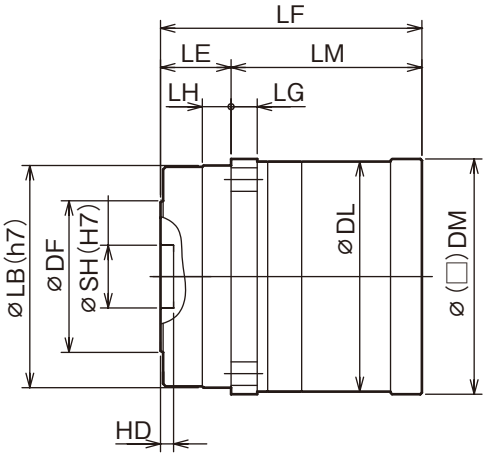

◆ Extended shaft output type (VRGS)

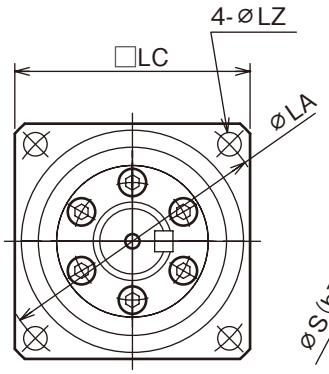

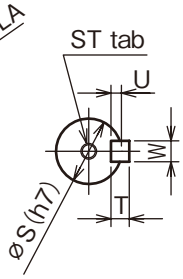

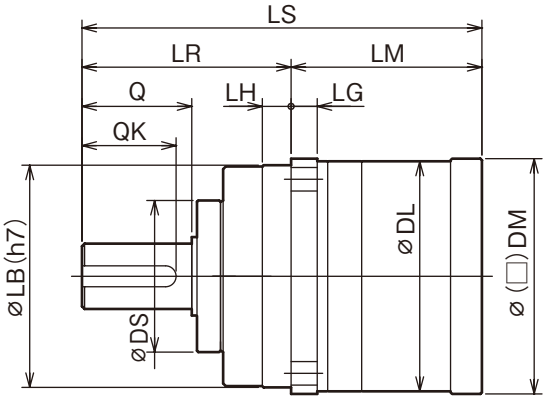

■ Dimensional table

Type				Common dimensions									Flange type (VRGF)							Output shaft type (VRGS)									
Model	Reduction ratio	Type no.	Cap.	LA	LB	LC	LZ	LG	LH	LM	DL	DM	LE	LF	DF	SH	HD	LJ	LT	LR	LS	Q	DS	S	ST	W	T	U	QK
VRG □	7・9・10	D120	750	135	115	120	11	13	15	67	118	118	35	102	79	32	5	60	M8 depth 12	133	200	82	78	40	M10 depth 20	12	8	5	70
VRG □	3.67・4・5・7・9・10	D120	1000	135	115	120	11	13	15	81	118	□ 120	35	116	79	32	5	60	M8 depth 12	133	214	82	78	40	M10 depth 20	12	8	5	70
VRG □	3.67・4・5・7・9・10	D120	1500	135	115	120	11	13	15	81	118	□ 120	35	116	79	32	5	60	M8 depth 12	133	214	82	78	40	M10 depth 20	12	8	5	70
VRG □	3.67・4・5・7・9・10	D120	2000	135	115	120	11	13	15	81	118	□ 120	35	116	79	32	5	60	M8 depth 12	133	214	82	78	40	M10 depth 20	12	8	5	70
VRG □	3.67・4・5・7・9・10	D120	2500	135	115	120	11	13	15	81	118	□ 120	35	116	79	32	5	60	M8 depth 12	133	214	82	78	40	M10 depth 20	12	8	5	70
VRG □	3.67・4・5・7・9	D120	3000	135	115	120	11	13	15	91	118	□ 130	35	126	79	32	5	60	M8 depth 12	133	224	82	78	40	M10 depth 20	12	8	5	70
VRG □	3.67・4・5・7・9	D120	3500	135	115	120	11	13	15	91	118	□ 130	35	126	79	32	5	60	M8 depth 12	133	224	82	78	40	M10 depth 20	12	8	5	70
VRG □	3.67・4・5・7	D120	4000	135	115	120	11	13	15	91	118	□ 130	35	126	79	32	5	60	M8 depth 12	133	224	82	78	40	M10 depth 20	12	8	5	70
VRG □	3.67・4・5・7	D120	4500	135	115	120	11	13	15	91	118	□ 130	35	126	79	32	5	60	M8 depth 12	133	224	82	78	40	M10 depth 20	12	8	5	70
VRG □	3.67・4・5	D120	5000	135	115	120	11	13	15	91	118	□ 130	35	126	79	32	5	60	M8 depth 12	133	224	82	78	40	M10 depth 20	12	8	5	70
VRG □	33・35・40・45・50・70	D120	400	135	115	120	11	13	15	87	118	94	35	122	79	32	5	60	M8 depth 12	133	220	82	78	40	M10 depth 20	12	8	5	70
VRG □	11・15.4・20・21・25 33・35・40・45・50	D120	750	135	115	120	11	13	15	94	118	118	35	129	79	32	5	60	M8 depth 12	133	227	82	78	40	M10 depth 20	12	8	5	70
VRG □	100	D120	100	135	115	120	11	13	15	74.5	118	68	35	109.5	79	32	5	60	M8 depth 12	133	207.5	82	78	40	M10 depth 20	12	8	5	70
VRG □	81・100	D120	200	135	115	120	11	13	15	81.5	118	94	35	116.5	79	32	5	60	M8 depth 12	133	214.5	82	78	40	M10 depth 20	12	8	5	70
VRG □	81	D120	400	135	115	120	11	13	15	81.5	118	94	35	116.5	79	32	5	60	M8 depth 12	133	214.5	82	78	40	M10 depth 20	12	8	5	70
VRG □	11・15.4・20・21・25 33・35・40・45・50	D120	1000	135	115	120	11	13	15	107	118	□ 120	35	142	79	32	5	60	M8 depth 12	133	240	82	78	40	M10 depth 20	12	8	5	70
VRG □	11・15.4・20・21・25 33	D120	1500	135	115	120	11	13	15	107	118	□ 120	35	142	79	32	5	60	M8 depth 12	133	240	82	78	40	M10 depth 20	12	8	5	70
VRG □	11・15.4・20・21	D120	2000	135	115	120	11	13	15	107	118	□ 120	35	142	79	32	5	60	M8 depth 12	133	240	82	78	40	M10 depth 20	12	8	5	70
VRG □	15.4	D120	2500	135	115	120	11	13	15	107	118	□ 120	35	142	79	32	5	60	M8 depth 12	133	240	82	78	40	M10 depth 20	12	8	5	70

Dimension Drawing & Table

■Reducer type no. : E170

◆Extended shaft output type (VRGF)

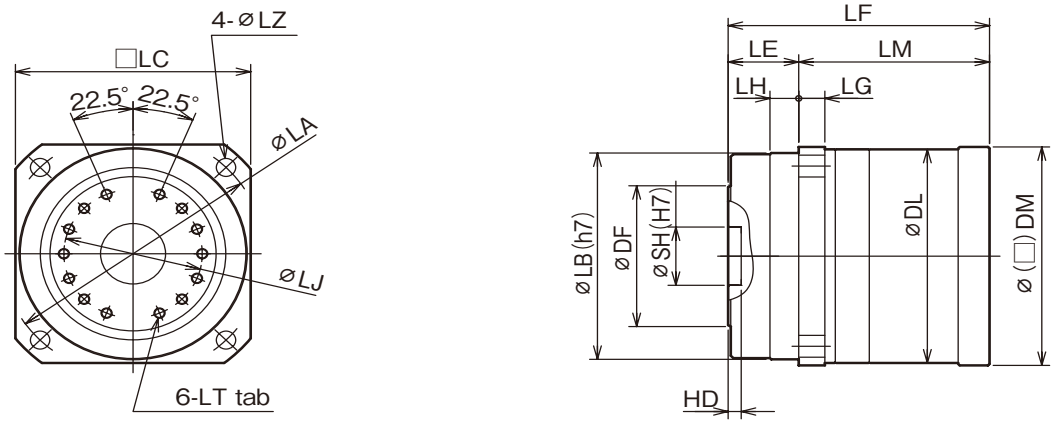

◆Extended shaft output type (VRGS)

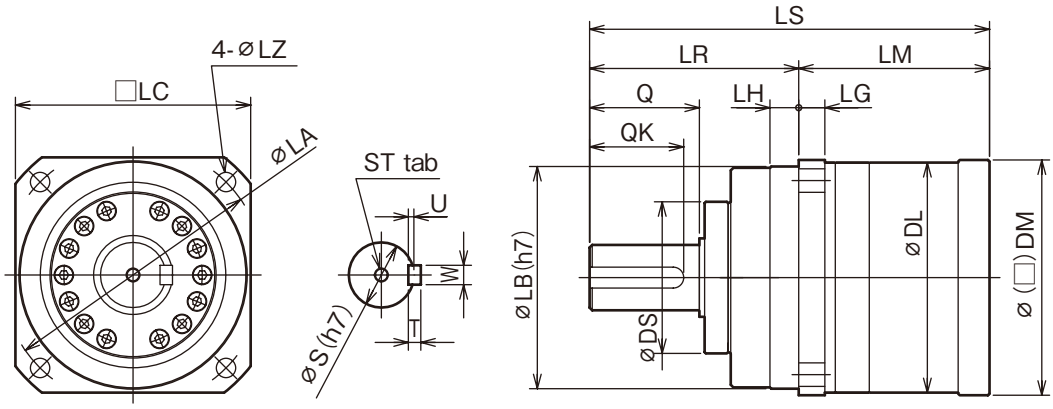

■ Dimensional table

Type				Common dimensions									Flange type (VRGF)							Output shaft type (VRGS)									
Model	Reduction ratio	Type no.	Cap.	LA	LB	LC	LZ	LG	LH	LM	DL	DM	LE	LF	DF	SH	HD	LJ	LT	LR	LS	Q	DS	S	ST	W	T	U	QK
VRG □	7・9・10	E170	1000	190	165	170	14	16	22	91	167	167	53	178	120	47	6	100	M8 depth 12	156	247	82	118	50	M10 depth 20	14	9	5.5	70
VRG □	7・9・10	E170	1500	190	165	170	14	16	22	91	167	167	53	144	120	47	6	100	M8 depth 12	156	247	82	118	50	M10 depth 20	14	9	5.5	70
VRG □	7・9・10	E170	2000	190	165	170	14	16	22	91	167	167	53	144	120	47	6	100	M8 depth 12	156	247	82	118	50	M10 depth 20	14	9	5.5	70
VRG □	7・9・10	E170	2500	190	165	170	14	16	22	91	167	167	53	144	120	47	6	100	M8 depth 12	156	247	82	118	50	M10 depth 20	14	9	5.5	70
VRG □	3.67・4・5・7・9・10	E170	3000	190	165	170	14	16	22	101	167	167	53	154	120	47	6	100	M8 depth 12	156	257	82	118	50	M10 depth 20	14	9	5.5	70
VRG □	3.67・4・5・7・9・10	E170	3500	190	165	170	14	16	22	101	167	167	53	154	120	47	6	100	M8 depth 12	156	257	82	118	50	M10 depth 20	14	9	5.5	70
VRG □	3.67・4・5・7・9・10	E170	4000	190	165	170	14	16	22	101	167	167	53	154	120	47	6	100	M8 depth 12	156	257	82	118	50	M10 depth 20	14	9	5.5	70
VRG □	3.67・4・5・7・9・10	E170	4500	190	165	170	14	16	22	101	167	167	53	154	120	47	6	100	M8 depth 12	156	257	82	118	50	M10 depth 20	14	9	5.5	70
VRG □	3.67・4・5・7・9・10	E170	5000	190	165	170	14	16	22	101	167	167	53	154	120	47	6	100	M8 depth 12	156	257	82	118	50	M10 depth 20	14	9	5.5	70
VRG □	33・35・40・45・50・70	E170	750	190	165	170	14	16	22	113	167	130	53	166	120	47	6	100	M8 depth 12	156	269	82	118	50	M10 depth 20	14	9	5.5	70
VRG □	100	E170	200	190	165	170	14	16	22	97	167	118	53	150	120	47	6	100	M8 depth 12	156	253	82	118	50	M10 depth 20	14	9	5.5	70
VRG □	81・100	E170	400	190	165	170	14	16	22	97	167	118	53	150	120	47	6	100	M8 depth 12	156	253	82	118	50	M10 depth 20	14	9	5.5	70
VRG □	81・100	E170	750	190	165	170	14	16	22	104	167	130	53	157	120	47	6	100	M8 depth 12	156	260	82	118	50	M10 depth 20	14	9	5.5	70
VRG □	11・15.4・20・21・25・33 35・40・45・50・70	E170	1000	190	165	170	14	16	22	125	167	130	53	178	120	47	6	100	M8 depth 12	156	281	82	118	50	M10 depth 20	14	9	5.5	70
VRG □	11・15.4・20・21・25・33 35・40・45・50・70	E170	1500	190	165	170	14	16	22	125	167	130	53	178	120	47	6	100	M8 depth 12	156	281	82	118	50	M10 depth 20	14	9	5.5	70
VRG □	11・15.4・20・21・25・33 35・40・45・50	E170	2000	190	165	170	14	16	22	125	167	130	53	178	120	47	6	100	M8 depth 12	156	281	82	118	50	M10 depth 20	14	9	5.5	70
VRG □	11・15.4・20・21・25・33 35・40・45・50	E170	2500	190	165	170	14	16	22	125	167	130	53	178	120	47	6	100	M8 depth 12	156	281	82	118	50	M10 depth 20	14	9	5.5	70
VRG □	11・15.4・20・21・25・33 35・40・45	E170	3000	190	165	170	14	16	22	135	167	167	53	188	120	47	6	100	M8 depth 12	156	291	82	118	50	M10 depth 20	14	9	5.5	70
VRG □	11・15.4・20・21・25	E170	3500	190	165	170	14	16	22	135	167	167	53	188	120	47	6	100	M8 depth 12	156	291	82	118	50	M10 depth 20	14	9	5.5	70
VRG □	11・15.4・20・21・25	E170	4000	190	165	170	14	16	22	135	167	167	53	188	120	47	6	100	M8 depth 12	156	291	82	118	50	M10 depth 20	14	9	5.5	70
VRG □	11・15.4・20・21	E170	4500	190	165	170	14	16	22	135	167	167	53	188	120	47	6	100	M8 depth 12	156	291	82	118	50	M10 depth 20	14	9	5.5	70
VRG □	11・15.4	E170	5000	190	165	170	14	16	22	135	167	167	53	188	120	47	6	100	M8 depth 12	156	291	82	118	50	M10 depth 20	14	9	5.5	70

■ If input speed is 3000rpm

Motor manufacturer	Motor series	Motor capacity(W)				
		50W	100W	200W	400W	750W
Panasonic	MSME	TYPE1				
	MSMD	TYPE1				
	MSMA	TYPE1				
	MUMA	Out of standard	Out of standard	TYPE1		No subject
	MBMK	TYPE1	Out of standard	TYPE1		
Yaskawa Electric	SGMJV	TYPE3				
	SGMAV	TYPE3				
	SGMAS	※※	TYPE2			※※
	SJME	No subject	TYPE2			※※
	SGMAH	※※	TYPE2			※※
Mitsubishi Electric	HF-KP	TYPE3				
	HF-MP	TYPE3				
	HF-KN	TYPE3				
	HC-PQ	TYPE3				No subject
	HC-KQ	TYPE3				No subject
	HC-KFS	TYPE3				
	HC-MFS	TYPE3				
Omron	R88M-K	TYPE1				※※
	R88M-G	TYPE3		TYPE1		※※
	R88M-W	※※	TYPE2			※※
	R7M-A	※※	TYPE2			※※
	R7M-Z	No subject	TYPE2			※※
	R88M-U	※※	TYPE2			※※
Fuji Electric Systems	GYS※	※※	TYPE2			※※
Sanyo Denki	P30B	TYPE3				TYPE2
	Q1	TYPE3				Out of standard
Keyence	SV	TYPE3				
	MV	TYPE3				Out of standard
Toshiba Machine	VLBSV-Z※	Out of standard		TYPE3		
	VLBSV-ZA※	Out of standard		TYPE3		
	VLBST	Out of standard		TYPE3		Out of standard
Tamagawa Seiki	TBL-i ※	TYPE3				No subject
	TBL-i Ⅱ ※	TYPE3				Out of standard
Nikki Denso	NA80※	TYPE3				Out of standard
	NA70 ※	TYPE3				No subject
	NA50	TYPE1				
Sanmei	TS※	TYPE3				Out of standard
	SS※	TYPE3				Out of standard
Hitachi Industrial Equipment Systems	ADMA	TYPE3				Out of standard
Miki Pulley	SA3	TYPE1				

Note 1) If an oil-seal is not present and the size is different, attachment of the oil-seal may correspond to a special order, in some cases.
Note 2) If the motor shaft is of D-cut and taper type, it corresponds to a special order.
Note 3) Note that thrust power arising out of instantaneous max. output torque by the combination of motor capacity(motor of the motor series table ※) and reduction ratio may exceed permissible thrust power of the servo motor. See the thrust load table on VR36 page.)

Besides, we try to attach to servo motor series of each supplier in addition to the following servo motor manufacturers. Please contact our nearest branch or distributor.

Shimponia Technology　NIDEC Sankyo　Allen-Bradley　etc.

Motor Matching Table

<1000~5000W>

■ If input speed is 3000rpm

Motor manufacturer	Motor series	Motor capacity(W)								
		1000W	1500W	2000W	2500W	3000W	3500W	4000W	4500W	5000W
Panasonic	MSME	Out of standard	TYPE1		No subject	TYPE1	No subject	TYPE1	No subject	TYPE1
	MSMA	TYPE1			No subject	TYPE1	No subject	TYPE1	No subject	TYPE1
Yaskawa Electric	SGMSV	TYPE2					No subject	TYPE2	No subject	TYPE2
	SGMSS	TYPE2					No subject	TYPE2	No subject	TYPE2
	SGMSH	TYPE2			No subject	TYPE2	No subject	TYPE2	No subject	TYPE2
Mitsubishi Electric	HC-RP	TYPE3			No subject		TYPE3	No subject		TYPE3
	HC-RFS	TYPE3			No subject		TYPE3	No subject		TYPE3
Omron	R88M-K	Out of standard	TYPE1		No subject	TYPE1	No subject	TYPE1	No subject	TYPE1
	R88M-G	TYPE1					No subject	TYPE1	No subject	TYPE1
	R88M-W	TYPE2			No subject	TYPE2	No subject	TYPE2	No subject	TYPE2
	R88M-U	TYPE2			No subject	TYPE2	No subject	TYPE2	No subject	TYPE2
Fuji Electric Systems	GYS	TYPE3			No subject	TYPE2	No subject	TYPE2	No subject	TYPE2

Standard compatibility with the following motor series

Motor manufacturer	Motor series	Motor capacity(W)
Mitsubishi Electric	HF-SP※	500W・1000W・1500W・2000W・3500W
	HC-SFS ※	
Yaskawa Electric	PGM-PH	100W・200W・400W・750W・1500W
	PGM-PS	

Note 1) If an oil-seal is not present and the size is different, attachment of the oil-seal may correspond to a special order, in some cases.
Note 2) If the motor shaft is of D-cut and taper type, it corresponds to a special order.
Note 3) Out-of-standard may correspond to a special order in some cases. For details, contact us.
Note 4) The motor in the above-mentioned motor series※ may correspond to both specifications of 3000rpm and 2000rpm in standards. For details, contact us.

Besides, we try to attach to servo motor series of each supplier in addition to the following servo motor manufacturers. Please contact our nearest branch or distributor.

Shimponia Technology　NIDEC Sankyo　Allen-Bradley　etc.

Detailed Dimensions Table of Motor Combination Flange Part (VRGS and VRGF in common)

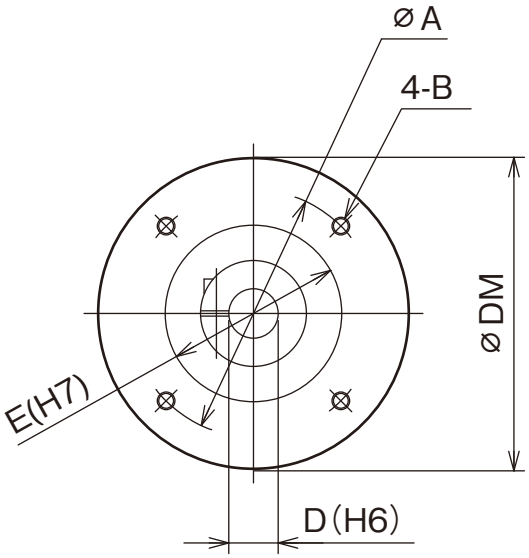

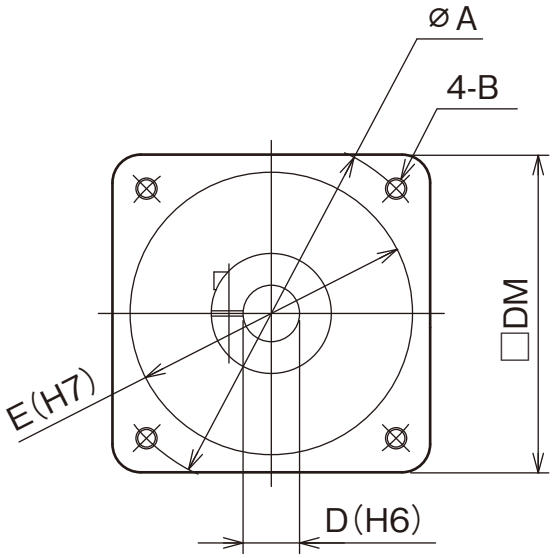

(単位：mm)

Type no.			Detailed dimensions of motor combination flange part														
Reduction ratio	Model no.	Motor cap.(W)	TYPE1					TYPE2					TYPE3				
			A	B	DM	D	E	A	B	DM	D	E	A	B	DM	D	E
3.67・4・5・7・9・10・11 15・15.4・20・21・25・33 35・40・45・50・70・81	B60P	50	45	M3	59	8	30	46	M4	59	6	30	46	M4	59	8	30
5・9・11・15・21・33・45	B60P	100	45	M3	59	8	30	46	M4	59	6	30	46	M4	59	8	30
33・45・81	C90	100	45	M3	68	8	30	46	M4	68	6	30	46	M4	68	8	30
5・9・11・15・21	B60P	200	70	M4	□60	11	50	70	M5	□60	14	50	70	M5	□60	14	50
5・9・11・15.4・21・33・45	C90	200	70	M4	88	11	50	70	M5	88	14	50	70	M5	88	14	50
81	D120	200	70	M4	94	11	50	70	M5	94	14	50	70	M5	94	14	50
5・9	B60P	400	70	M4	□60	14	50	70	M5	□60	14	50	70	M5	□60	14	50
5・9・11・15.4・21・33・45	C90	400	70	M4	88	14	50	70	M5	88	14	50	70	M5	88	14	50
33・45・81	D120	400	70	M4	94	14	50	70	M5	94	14	50	70	M5	94	14	50
81	E170	400	70	M4	118	14	50	70	M5	118	14	50	70	M5	118	14	50
5・9・11・15.4	C90	750	90	M5	□90	19	70	90	M6	□90	16	70	90	M6	□90	19	70
9・11・15.4・21・33・45	D120	750	90	M5	118	19	70	90	M6	118	16	70	90	M6	118	19	70
33・45・81	E170	750	90	M5	130	19	70	90	M6	130	16	70	90	M6	130	19	70
5・9	C90	1000	100	M6	□100	19	80	115	M6	□100	24	95	115	M6	□100	24	95
5・9・11・15.4・21・33・45	D120	1000	100	M6	□120	19	80	115	M6	□120	24	95	115	M6	□120	24	95
9・11・15.4・21・33・45	E170	1000	100	M6	167	19	80	115	M6	167	24	95	115	M6	167	24	95
5	C90	1500	115	M8	□100	19	95	115	M6	□100	24	95	115	M8	□100	24	95
5・9・11・15.4・21・33	D120	1500	115	M8	□120	19	95	115	M6	□120	24	95	115	M8	□120	24	95
9・11・15.4・21・33・45	E170	1500	115	M8	167	19	95	115	M6	167	24	95	115	M8	167	24	95
5・9・11・15.4・21	D120	2000	115	M8	□120	19	95	115	M6	□120	24	95	115	M8	□120	24	95
9・11・15.4・21・33・45	E170	2000	115	M8	167	19	95	115	M6	167	24	95	115	M8	167	24	95
5・9・15.4	D120	2500	115	M8	□120	19	95	115	M6	□120	24	95	–	–	–	–	–
9・11・15.4・21・33	E170	2500	115	M8	167	19	95	115	M6	167	24	95	–	–	–	–	–
5・9	D120	3000	130	M8	□120	22	110	145	M8	□120	28	110	–	–	–	–	–
5・9・11・15.4・21・33	E170	3000	130	M8	167	22	110	145	M8	167	28	110	–	–	–	–	–
5・9	D120	3500	130	M8	□120	22	110	–	–	–	–	–	145	M8	□120	28	110
5・9・11・15.4・21	E170	3500	130	M8	167	22	110	–	–	–	–	–	145	M8	167	28	110
5	D120	4000	145	M8	□120	24	110	145	M8	□120	28	110	–	–	–	–	–
5・9・11・15.4・21	E170	4000	145	M8	167	24	110	145	M8	167	28	110	–	–	–	–	–
5	D120	4500	145	M8	□120	24	110	–	–	–	–	–	–	–	–	–	–
5・9・11・15.4・21	E170	4500	145	M8	167	24	110	–	–	–	–	–	–	–	–	–	–
5	D120	5000	145	M8	□120	24	110	145	M8	□120	28	110	145	M8	□120	28	110
5・9・11・15.4	E170	5000	145	M8	167	24	110	145	M8	167	28	110	145	M8	167	28	110

Characteristics(Backlash & Torsional Strength)

Type No.	Reduction Ratio	Backlash※1		Torsional Strength※2 A/B		Max. Torsional Strength※3 C	
		arcmin	× 10^{-4}rad	Nm/arcmin	× 100Nm/rad	arcmin	× 10^{-4}rad
B60P	5	3	8.7	2.0	69	6	17.5
	9						
	11					6	17.5
	15						
	21						
	33						
	45						
	81						
C90	5	3	8.7	10	344	5	14.5
	9						
	11					6	17.5
	15.4						
	21						
	33						
	45						
	81						
D120	5	3	8.7	30	1031	5	14.5
	9						
	11					6	17.5
	15.4						
	21						
	33						
	45						
	81						
E170	5	3	8.7	80	2750	4	11.6
	9						
	11					4	11.6
	15.4						
	21						
	33						
	45						
	81						

※1 Backlash ··· Zero(0) torque in the torque-torsional angle graph
※2 Torsional strength ··· Straight line(strength) in the torque-torsional angle graph
※3 Max. torsional angle ··· Torsional angle pertinent to the y-intercept at permissible output torque

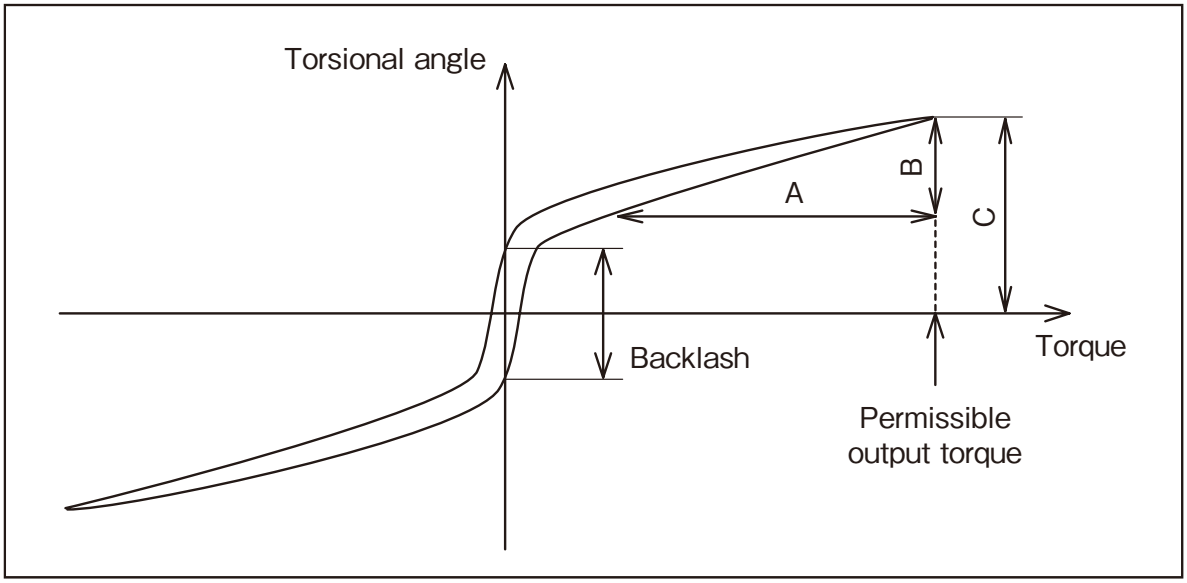

Characteristics(Degree of Transmission of Angle Speed, No Load Running Torque, Increased Speed Torque, Noise Value)

Type no.	Reduction ratio	Degree of angle transmission ※ 1		No load running torque ※ 2	Increased speed torque ※ 3	Noise value ※ 4
		arcmin	$\times 10^{-4}$rad	Nm	Nm	dB-A
B60P	5	4	11.6	0.10	0.4	68
	9			0.07	0.6	64
	11			0.10	0.8	70
	15			0.07	1.0	70
	21			0.04	1.2	64
	33			0.03	1.4	60
	45			0.03	1.6	60
	81			0.03	2.5	60
C90	5	4	11.6	0.29	0.8	70
	9			0.16	1.0	66
	11			0.18	1.3	73
	15.4			0.10	1.5	68
	21			0.10	1.8	66
	33			0.09	2.2	62
	45			0.08	2.6	62
	81			0.06	4.0	62
D120	5	4	11.6	0.59	1.2	76
	9			0.32	1.8	72
	11			0.41	2.2	76
	15.4			0.27	2.8	72
	21			0.23	3.5	72
	33			0.20	4.5	68
	45			0.17	6.0	68
	81			0.09	8.0	68
E170	5	3	8.7	1.38	2.4	72
	9			0.76	3.6	68
	11			1.15	5.0	74
	15.4			0.86	6.5	72
	21			0.75	8.5	72
	33			0.49	12	66
	45			0.47	16	66
	81			0.23	20	66

※ 1 Error of angle transmission ··· Difference in theoretical output rotation angle and actual one in case of rotating the input shaft under no load
※ 2 No load running torque ··· Torque of the input side necessary for rotating the input side under no load at 3000rpm (mean value)
※ 3 Increased speed torque ··· Torque of the output side necessary for rotating the output side under no load at 10rm (max. value)
※ 4 Noise value ··· The measuring conditions for internal investigation are as follows:
Reducer input speed : 3000rpm (2000rpm for E type)
Measuring spot : 50cm distant from the product
Load : Permissible output torque load of the reducer
Fixation of the reducer : The reducer shall be fixed onto the L-type combination plate so that it cannot move.

Characteristics of Efficiency

■Characteristics of Efficiency : B60P

Performance table, if input speed(RPM) is 3000rpm

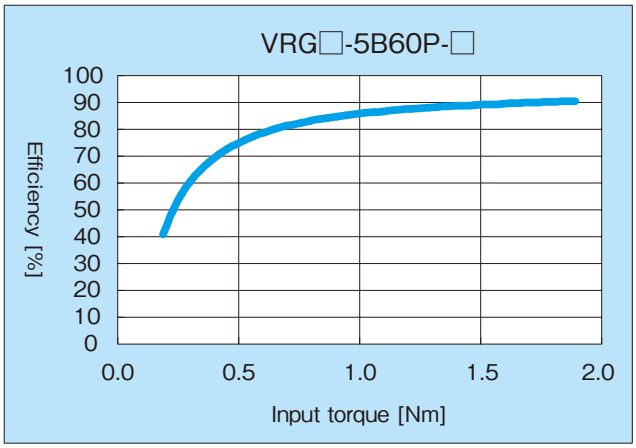

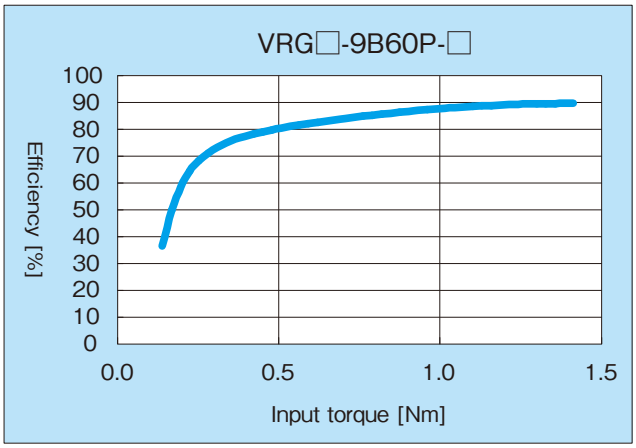

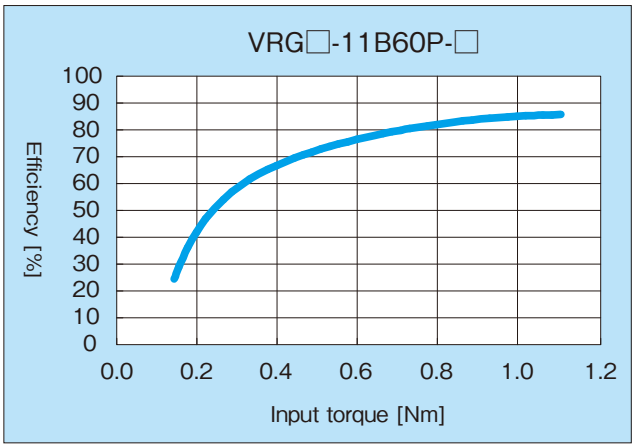

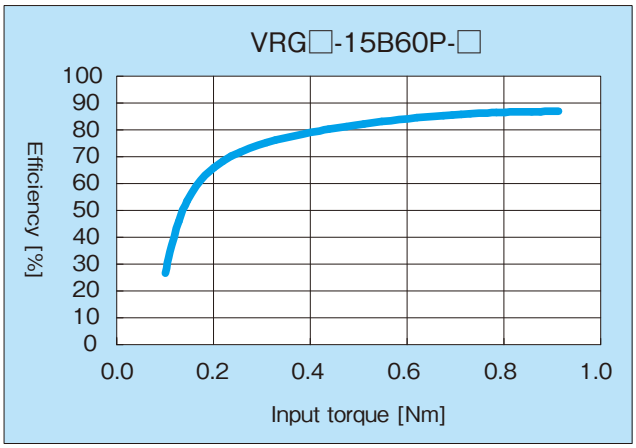

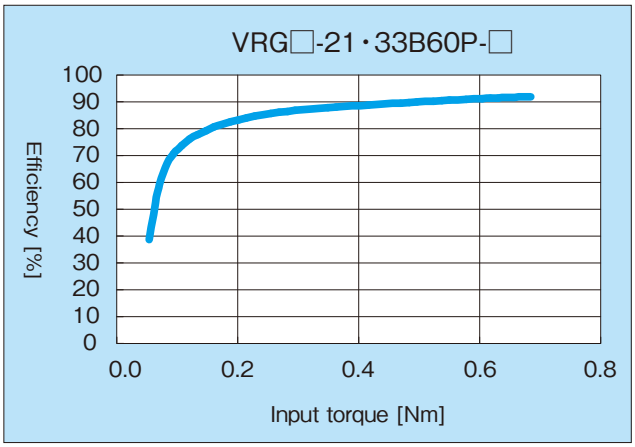

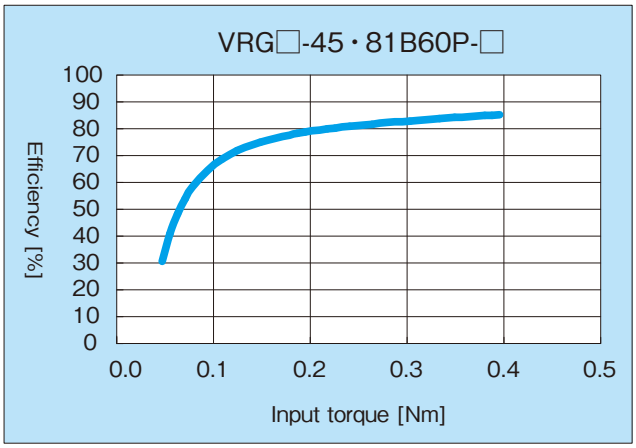

■Characteristics of Efficiency : C90

Performance table, if input speed(RPM) is 3000rpm

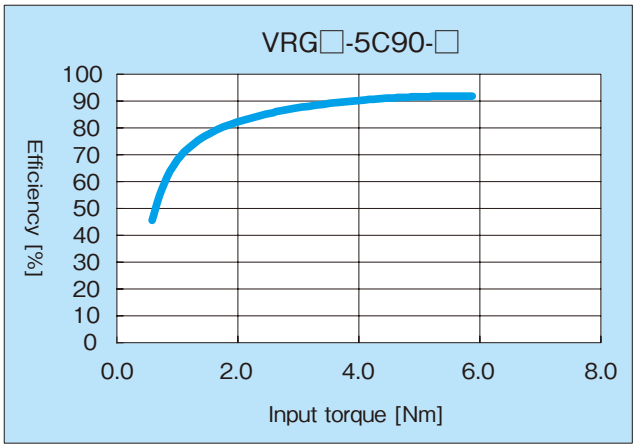

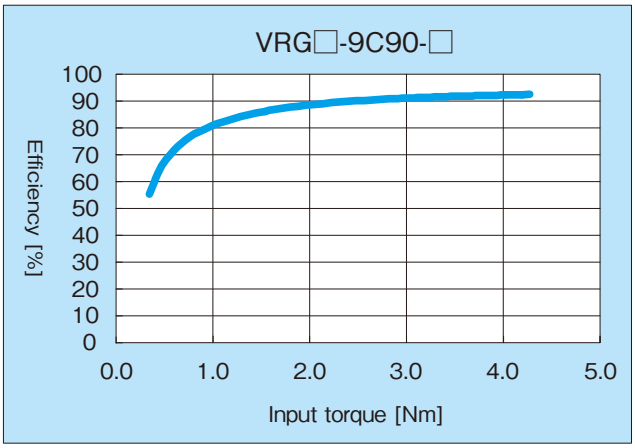

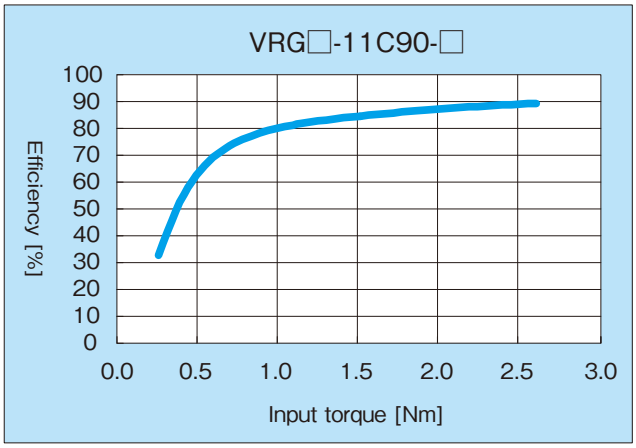

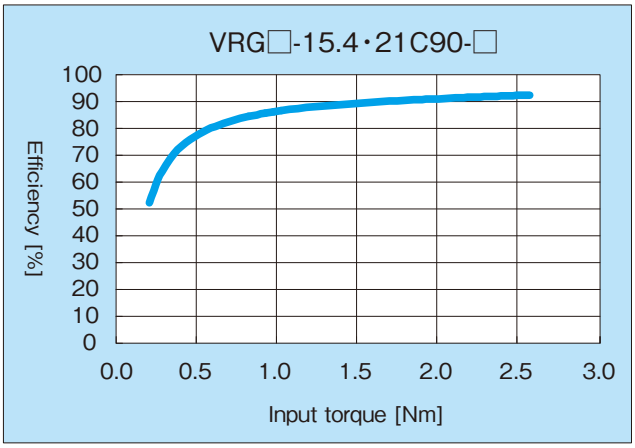

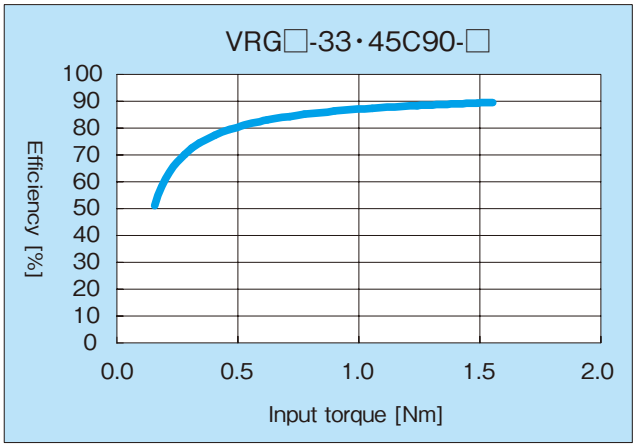

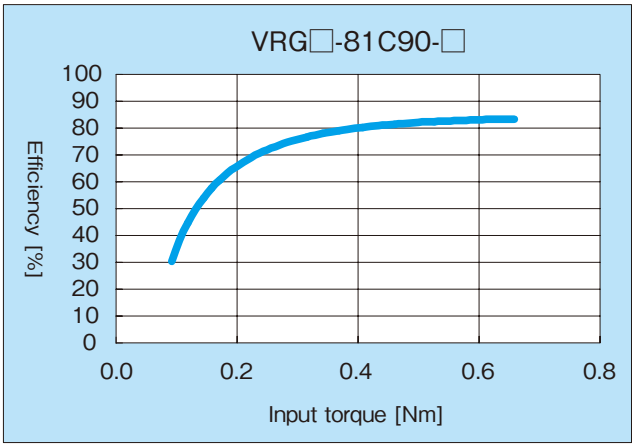

Characteristics of Efficiency

■Characteristics of Efficiency : D120

Performance table, if input speed(RPM) is 3000rpm

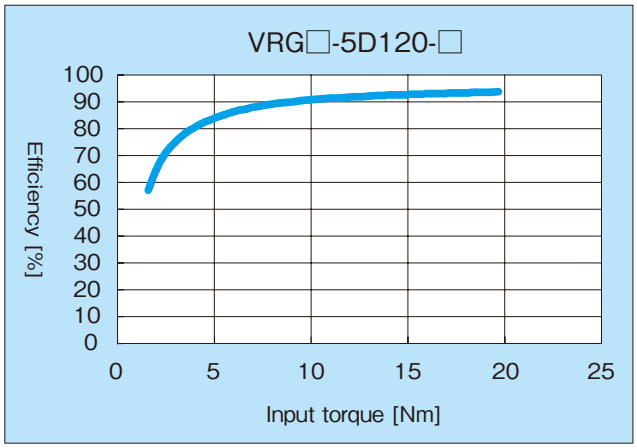

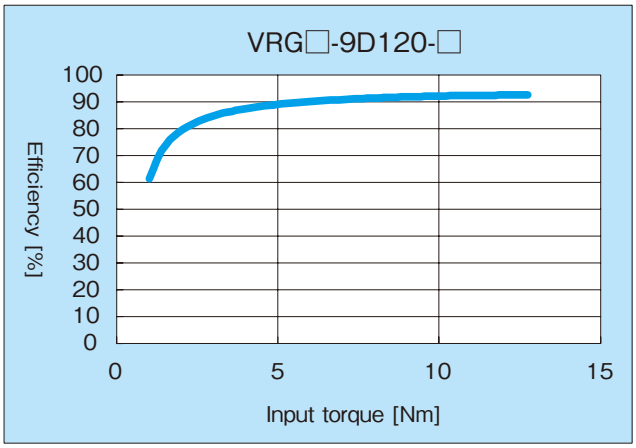

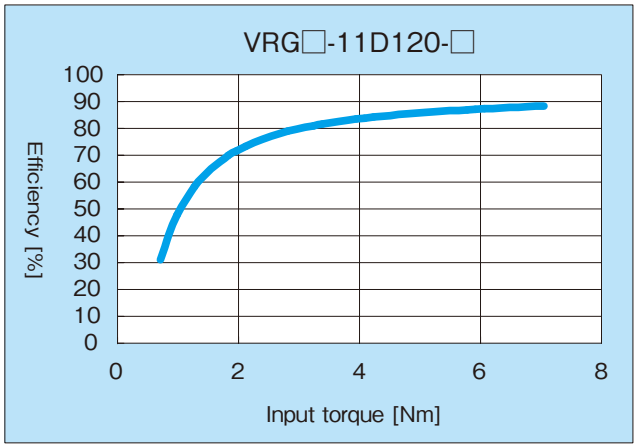

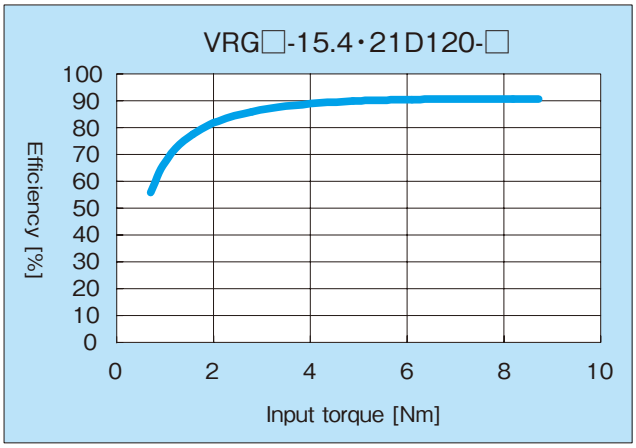

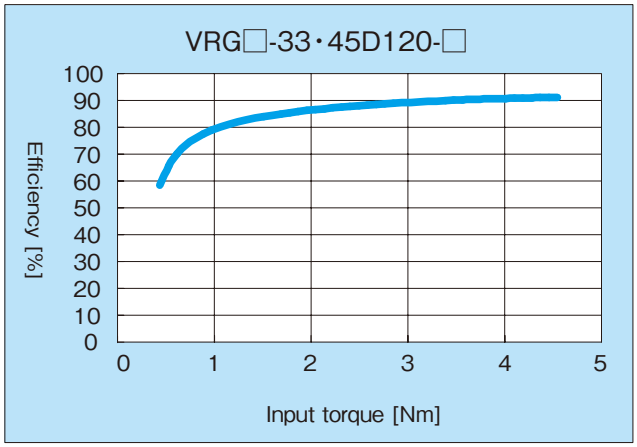

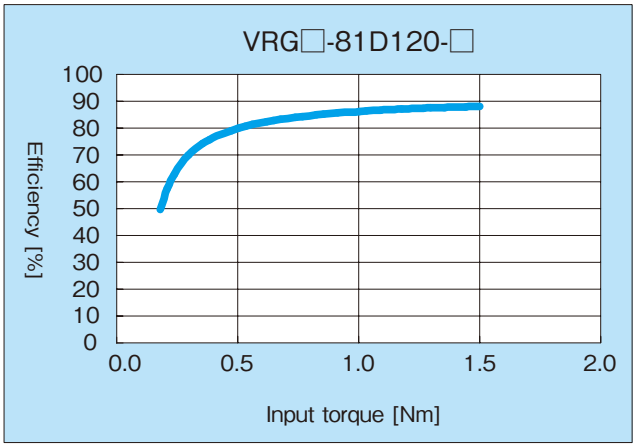

■Characteristics of Efficiency : E170

Performance table, if input speed(RPM) is 3000rpm

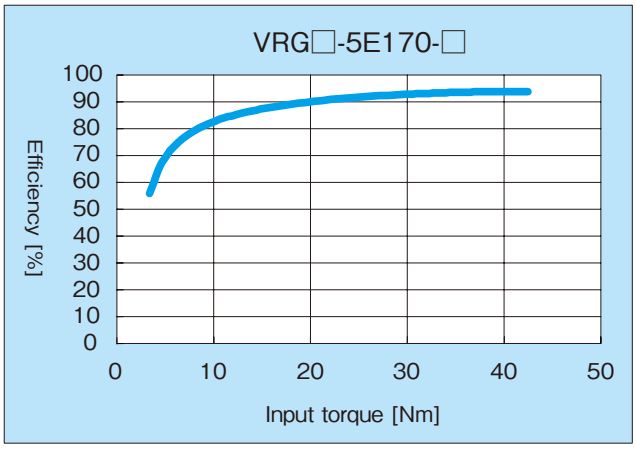

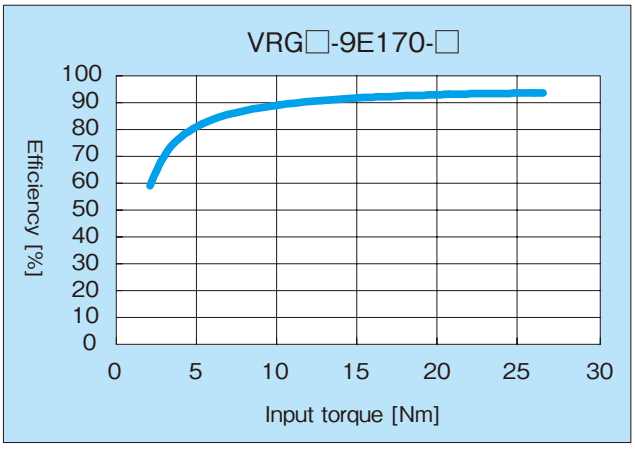

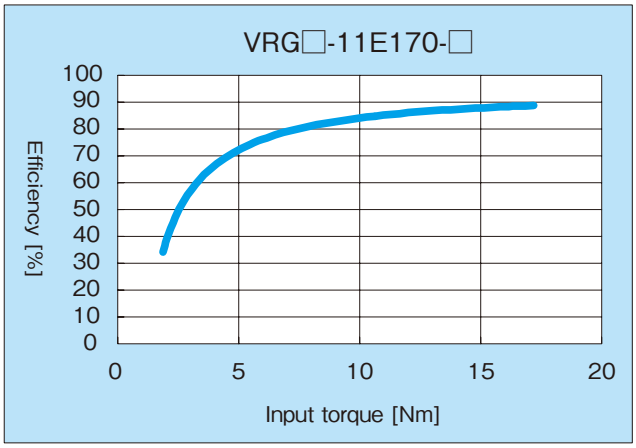

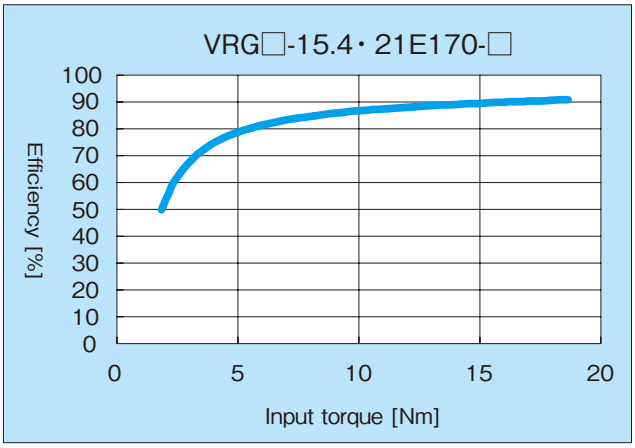

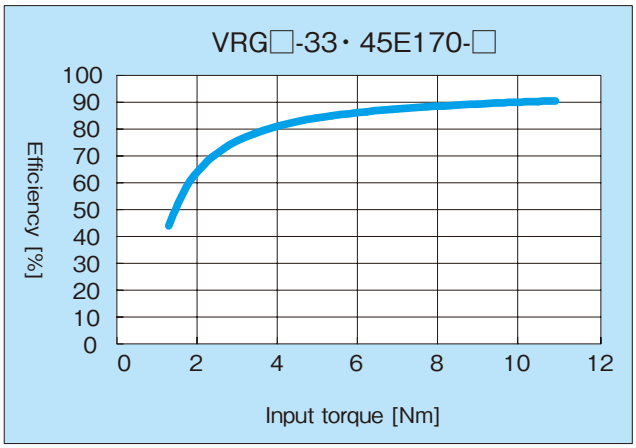

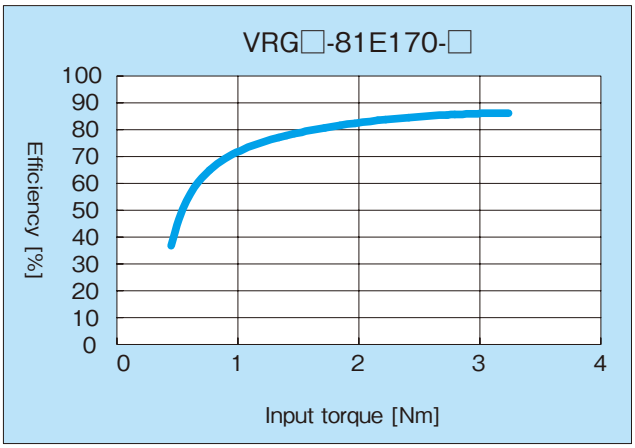

Operating Mechanism

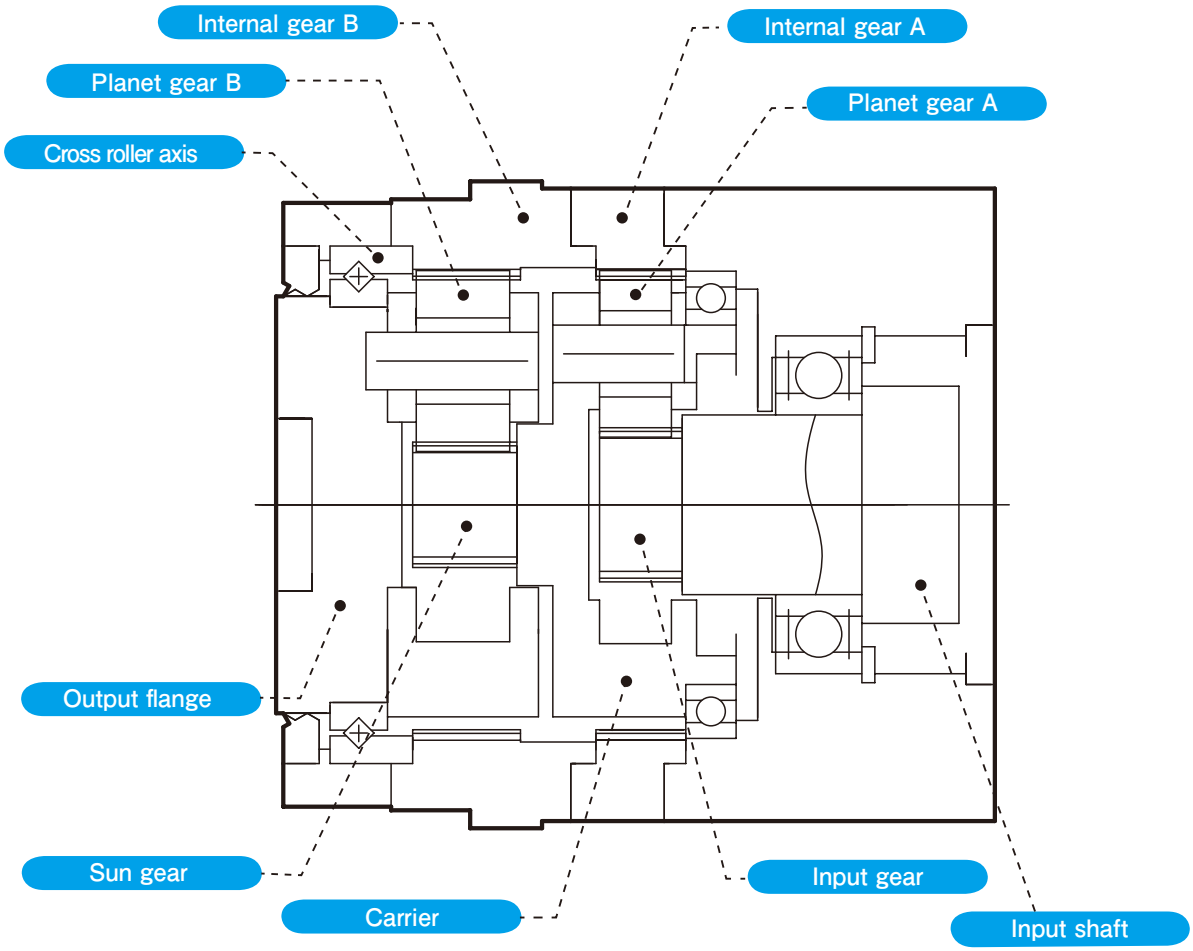

1step reduction part

Motor~input gear~planet gear A~carrier

Rotation from the motor is delivered by the input gear attached to the input shaft. The input gear makes the planet gear A contacting the internal gear A go in gear. This transmits orbital motion to the planet gear A and rotates the 2step sun gear through the carrier.

The rotating direction is same as input rotation.

2step reduction part

Carrier~sun gear~planet gear B~output shaft

Rotation of the carrier is delivered by the sun gear attached to the carrier. This transmission delivers orbital motion to the planet gear B through a motion going in gear with the planet gear B contacting the internal gear B. The output shaft is rotated by this orbital movement.

The rotating direction is same as input rotation.

The above mention is explanation for the 2step reducer.
The 1step reducer runs only under the operating mechanism of the 2step reduction part.

Type No. may be simply selected from the type no. listing table of motors and reducers. However, if combination beyond standards or detailed examination is necessary, please select type no. following the selection procedure mentioned below:

1 Calculate load pattern.

Load torque : T_1 、 T_2 、 … T
Output speed : n_1 、 n_2 、 … n
Upon acceleration & reduction, mean of the changing revolutions per minute shall be used.
Time : t_1 、 t_2 、 … t

(Load pattern)

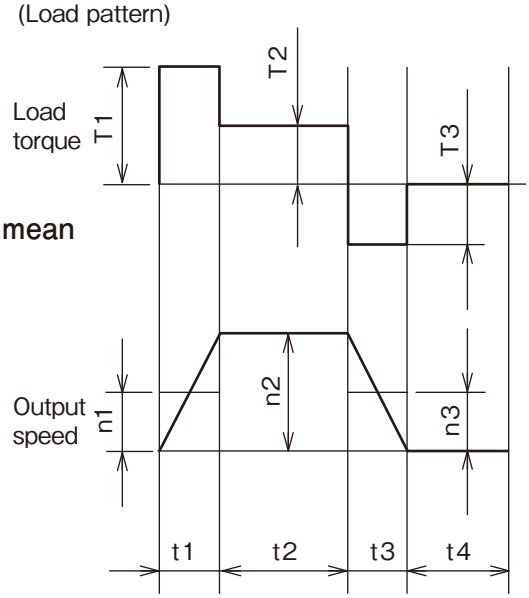

2 Calculate mean load torque given to the output shaft and mean output speed from the load pattern.

(Mean load torque)

$$Ta = \sqrt[10/3]{\frac{n_1 \cdot t_1 \cdot |T_1|^{10/3} + n_2 \cdot t_2 \cdot |T_2|^{10/3} + \cdots + n_n \cdot t_n \cdot |T_n|^{10/3}}{n_1 \cdot t_1 + n_2 \cdot t_2 + n_n \cdot t_n}}$$

(Mean output speed)

$$n_{a\,out} = \frac{n_1 \cdot t_1 + n_2 \cdot t_2 \cdots + n_n \cdot t_n}{t_1 + t_2 + \cdots + t_n}$$

3 Select a reduction ratio from max. output speed in the load pattern and max. input speed in the performance table.

$$\frac{\text{Max. permissible input speed}}{\text{Max. load output speed}} = \text{Temporary reduction ratio}$$

Select a lower reduction ratio than the temporary reduction ratiio.

4 Calculate mean input speed and max input speed from the reduction ratio.

Mean input speed = Mean output speed × reduction ratio
Max input speed = Max output speed × reduction ratio

5 Finally, select type No.

①Select minimum type no. so that mean load torque can be permissible output torque in the performance table.
②Make sure that max. load torque is less than max. permissible output torque of selected type no.
③Ensure that mean input speed and max input speed are less than mean permissible input speed and max. permissible input speed of the selected type no.

※(Reference) Reducer life calculation equation in load pattern

$$\text{Life time hrs} = 20000 \times \left(\frac{\text{Permissible output torque}}{\text{Mean load torque}}\right)^{10/3} \times \left(\frac{\text{Mean permissible input torque}}{\text{Mean input speed}}\right)$$

If external load(radial load & thrust load) is applied, the main axis life shall be calculated according to the following procedure:

1 Checkup of max. load moment

Make sure that max. load moment by the acting external load is within the permissible moment.
[Calculate max. load moment(Mmax).]

$$Mmax = Frmax \cdot (Lr + S) \pm Ftmax \cdot Lt$$

[Ensure that it is within the permissible moment(Mal).]

$$Mmax \leq Mal$$

※ Max. thrust load must not exceed max. permissible load as mentioned ※ in the following table.

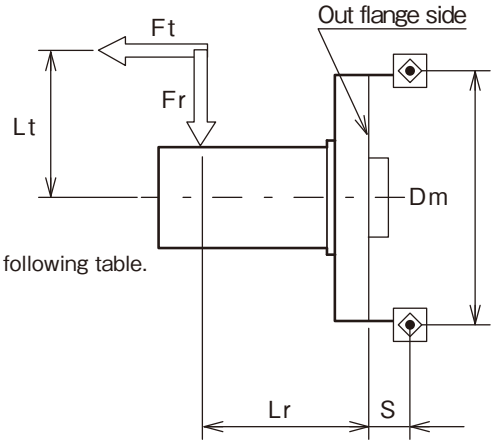

Type No.	Size S (mm)	Mal (nm)
B	11	38
C	11.5	138
D	13.5	360
E	22	1037

Type No.	Max. permissible thrust load
B	927
C	2650
D	3740
E	10800

2 Checkup of axis life time

Calculate equivalent radial load through the acting external load, and then make sure that axis life time satisfies the required time. [Calculate external load pattern, mean external load, mean output speed, and mean load moment.]

(Load pattern)

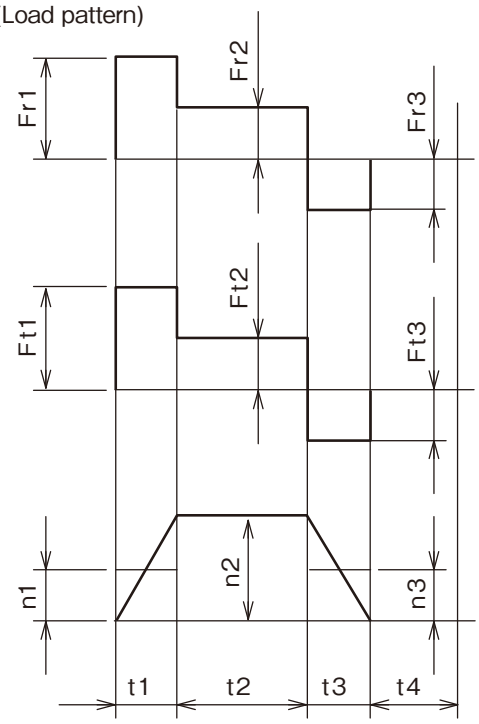

(Mean radial load)

$$Fra = \sqrt[10/3]{\frac{n_1 \cdot t_1 \cdot |Fr_1|^{10/3} + n_2 \cdot t_2 \cdot |Fr_2|^{10/3} + \cdots + n_n \cdot t_n \cdot |Fr_n|^{10/3}}{n_1 \cdot t_1 + n_2 \cdot t_2 + n_n \cdot t_n}}$$

(Mean thrust load)

$$Fta = \sqrt[10/3]{\frac{n_1 \cdot t_1 \cdot |Ft_1|^{10/3} + n_2 \cdot t_2 \cdot |Ft_2|^{10/3} + \cdots + n_n \cdot t_n \cdot |Ft_n|^{10/3}}{n_1 \cdot t_1 + n_2 \cdot t_2 + n_n \cdot t_n}}$$

(Mean output speed)

$$n_{a\,out} = \frac{n_1 \cdot t_1 + n_2 \cdot t_2 \cdots + n_n \cdot t_n}{t_1 + t_2 + \cdots + t_n}$$

(Mean load moment)

$$Ma = Fra \cdot (Lr + S) \pm Fta \cdot Lt$$

(Note) Add or reduce moment force according to load direction.

[Calculate load factor.]

Following the conditional equations: Radial load factor Thrust load factor

$$\frac{Fta}{Fra + 2Ma/Dm} \leq 1.5 \qquad X = 1.0 \qquad Y = 0.45$$

$$\frac{Fta}{Fra + 2Ma/Dm} > 1.5 \qquad X = 0.67 \qquad Y = 0.67$$

[Calculate equivalent radial load.]

$$Pr = X \cdot (Fra + 2Ma/Dm) + Y \cdot Fta$$

[Calculate the life time of the output axis.]

$$Lh = \frac{10^6}{60 \cdot n_{a\,out}} \cdot \left(\frac{C}{fw \cdot Pr}\right)^{10/3}$$

Axis spec.

Type No.	Basic rated load C (N)	Basic rated load C (N)
B	4370	39
C	8420	63
D	14700	85
E	29200	121

Impact factor fw

Degree of impact	fw
if impact is not involved	1.0
If a little impact is involved	1.2
If vibration impact is involved	1.5

1 Radial load factor

① oils on the motor shaft.
② Eliminate the rubber cap, turn the input shaft, and match the bolt head to the rubber cap hole. Then make sure that the clamp bolt is loosened.
③ Vertically position the reducer on a flat place with the motor jointing side of the reducer faced upward.
④ Gently insert the motor shaft into the input shaft without impact and ensure that the motor flange side is closely adhered to the reducer flange side.
⑤ Fasten the motor jointing bolt with designated fastening torque.
⑥ Fasten the clamp bolt using torque wrench with designated fastening torque.
⑦ Joint the rubber cap. This is the end.

Bolt fastening torque

Bolt size	Motor jointing bolt		Clamp bolt	
	Nm	kgfm	Nm	kgfm
M3	1.0	0.10	1.8	0.18
M4	2.3	0.23	4.3	0.44
M5	4.7	0.48	8.7	0.89
M6	8.0	0.82	15	1.5
M8	19	1.9	36	3.7
M10	38	3.9	72	7.3
M12	67	6.8	–	–

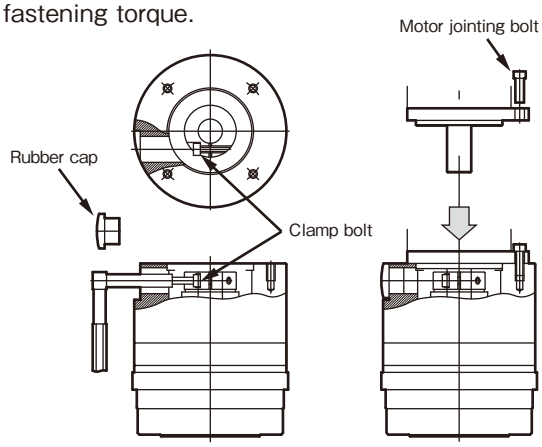

2 Jointing of reducer

Whenever jointing a reducer into the device, fasten the bolt with designated fastening torque using torque wrench, where the jointing side is flat without protrusion.

Jointing torque of reducer jointing bolt

Type No.	Bolt size	Jointing torque	
		Nm	kgfm
B60P	M5	6.2	0.63
C90	M8	26	2.7
D120	M10	51	5.2
E170	M12	89	9.1

※Recommended bolt : 12.9 at least of strength

3 Jointing into the output flange (VRGF (flange type) limitation)

Whenever jointing a part into the output flange, fasten the bolt with designated fastening torque using torque wrench.

Fastening torque of output flange bolt

Type No.	Bolt size	Jointing torque	
		Nm	kgfm
B60P	M4	4.3	0.44
C90	M6	15	1.5
D120	M8	36	3.7
E170	M8	36	3.7

※Recommended bolt : 12.9 at least of strength

For dimensional precision of mechanical jointing of extended shaft output type (VRGS) and flange output type (VRGF), see the following drawing:
(Unit : mm)

◆ Extended shaft output type (VRGS)

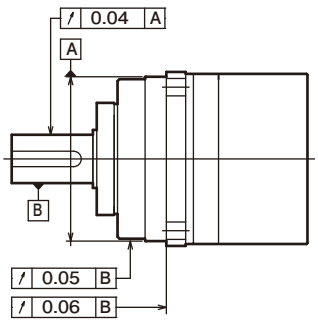

◆ Flange output type (VRGF)

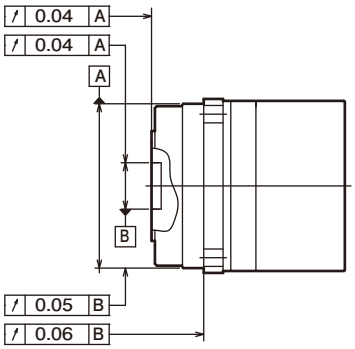

Right angle type responding to jointing to narrow spaces

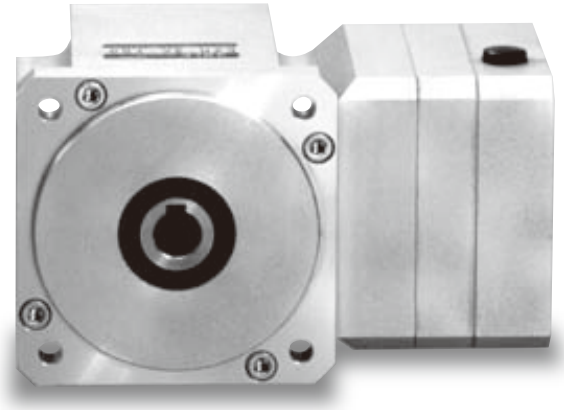

Hollow shaft

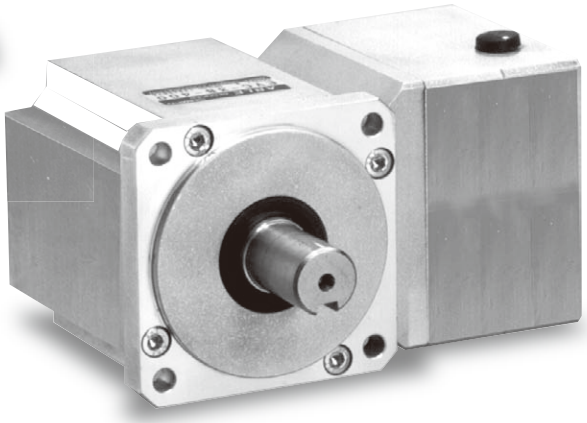

Solid shaft

Maximum noise reduction effects realized, which could not be gained from existing reducers

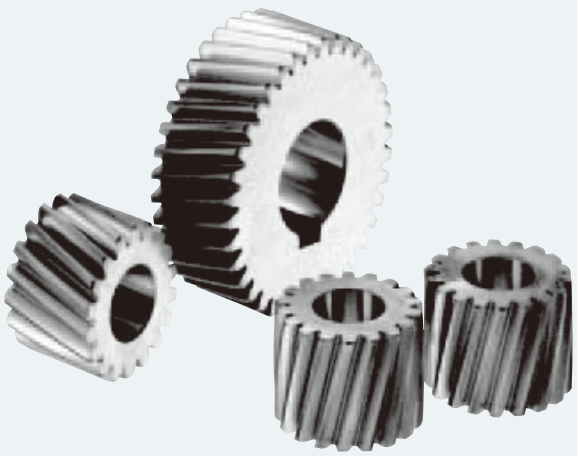

* The helical gear is tilted to the engaging shaft as shown in the left figure(parallel for existing gears).
This makes engagement of the gear smoother compared to existing parallel gears, reducing the noise.

Response to narrow space

Available to narrow space, the characteristics of a compact servo motor are maximized.

Compact of 96mm full length (hollow shaft)

Available to narrow space, the characteristics of a compact servo motor are maximized, as compact design of right angle type.

Reduction ratio: 1/3~1/105, Motor capacity 100W~4KW into series

Maintenance free & free assembling

Using high-grade grease of long life as lubricant, there is no need of replacement. In addition, it is seal-filled and thus the combining and attaching position is free changeable.

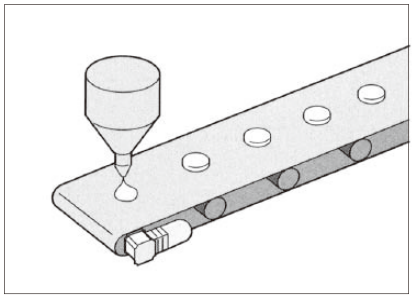

Attachable to compact servo motors of each supplier

Attachable to servo motors of the following makers:

- PANASONIC
- FANUC
- NIKKI DENSO
- YASKAWA ELECTRIC
- SHIMPONIA TECHNOLOGY
- MIKI PULLEY
- MITSUBISHI ELECTRIC
- TOSHIBA MACHINE
- HITACHI INDUSTRIAL EQUIPMENT SYSTEMS
- OMRON
- SANYO DENKI
- KEYENCE
- TAMAGAWA SEIKI
- FUJI ELECTRIC SYSTEMS
- SANMEI

Assembling may be impossible according to motor series of each supplier, in some cases. (For ※ details, contact us.)

Delivery in 5 days

Available of short-term delivery
ABLE REDUCER

Arrival at 5 days after an order is received.

Day 1	Day 2	Day 3	Day 4	Day 5
Order receipt			Delivery	Arrival

※Some may be excluded from subjects according to motor capacity.

■Available conditions of short-term delivery

※Number of lots : 10 units or less for the same model
※Supplied motors: If a motor supplied by our company is attached, it is excluded from subjects.
※Shaft-specific processing: In case of tab processing of the output shaft, it is excluded from subjects.

Model & Type Symbol

Low Noise

With a helical gear instead of previous spur gears, lower noise is realized compared to existing ones.

Space Saving Type

In case of right angle shaft type NEV series, jointing is available even in a space uncapable of storage in the coaxial shaft type.

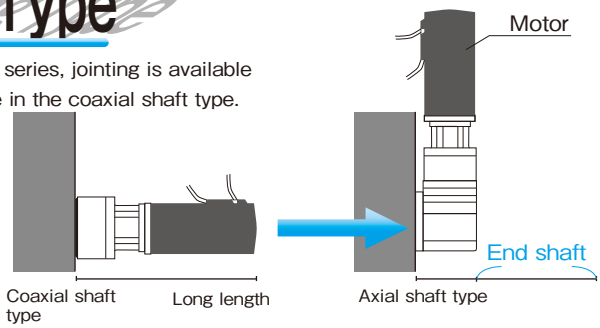

The reducer output shaft is in the center of the combination side, so combination type is free changeable.

Model & type symbol

ABLE REDUCER | Servo motor

NEV S C - 3 B - 100 - [ ] - [Designate type no. of the motor manufacturer, certainly.]

- Designate type no. of the motor manufacturer, certainly. — Type No.
- [ ] — Manufacturer name
- 100 — Applicable servo motor capacity (W)
- B — Reducer type no. / B, C, D, and E types
- 3 — Reduction ratio / 3,5,9,15,27,45,75,105 ※ The reduction ratios are actual ones.
- C — Output shaft type / C : Solid shaft type H : Shallow shaft type (penetrating type)
- S — Input part type / S : Clamp fastening type (compatible irrespective of key slot of the motor shaft<D cut, unavailable>)※1
  - ■ Attachment available:
  - K : Coupling(straight shaft, key slot attachment)※2
  - ※1 D cut only responds to K type.
  - ※2 Response to a special order. For more details, contact us.
- NEV — Name of the ABLE REDUCER right angle shaft backlash0.5° (30min)

Reduction ratio & type no.

■ If input speed is 3000rpm

Capacity(W) \ Reduction ratio	1/3	1/5	1/9	1/15	1/27	1/45	1/75	1/105
100	B	B	B	B	B	C	D	D
200	B	B	C	C	C	C	E	E
400	B	C	D	D	D	E	—	—
750	C	C	D	D	D	—	—	—
1000	C	E	E	E	E	—	—	—
1500	D	E	E	E	E	—	—	—
2000	D	E	E	E	E	—	—	—
2500	D	—	—	—	—	—	—	—
3000	E	—	—	—	—	—	—	—
3500	E	—	—	—	—	—	—	—
4000	E	—	—	—	—	—	—	—

■ About lubricant

- Lubrication : Multitemp GM greaseS (perpendicular reduction part)
  Multitemp AC-D (planet reduction part)
- Replacement : Unnecessary

Reduction ratio	Type				Output shaft speed	Rated output torque	Max. instantaneous output torque	Permissible radial load	Permissible thrust load	Internal moment of inertia of input shaft conversion	Permissible output torque	Max. instantaneous permissible output torque
	Model	Reduction ratio	Type no.	Motor cap.	[rpm]	[Nm]	[Nm]	[N]	[N]	[10^{-4} × kgm^2]	[Nm]	[Nm]
1/3	NEVS □	-3	B	-100	1000	0.48	1.43	784	392	0.377	5.00	15.0
	NEVS □	-3	B	-200	1000	1.34	4.01	784	392	0.510	5.00	15.0
	NEVS □	-3	B	-400	1000	3.25	9.74	784	392	0.504	5.00	15.0
	NEVS □	-3	C	-750	1000	6.44	19.3	784	392	0.978	8.83	26.5
	NEVS □	-3	C	-1000	1000	8.59	25.8	784	392	1.77	9.02	27.1
	NEVS □	-3	D	-1500	1000	11.9	35.8	980	490	3.90	22.6	67.7
	NEVS □	-3	D	-2000	1000	16.7	50.1	980	490	3.90	22.6	67.7
	NEVS □	-3	D	-2500	1000	21.5	64.4	980	490	3.90	22.6	67.7
	NEVS □	-3	E	-3000	1000	24.8	74.5	1176	588	6.61	36.1	108
	NEVS □	-3	E	-3500	1000	29.6	88.8	1176	588	6.61	36.1	108
	NEVS □	-3	E	-4000	1000	34.4	103	1176	588	6.61	36.1	108
1/5	NEVS □	-5	B	-100	600	0.99	2.96	980	490	0.144	1.34	4.03
	NEVS □	-5	B	-200	600	2.58	7.73	980	490	0.539	4.57	13.7
	NEVS □	-5	C	-400	600	5.15	15.4	980	490	0.555	5.40	16.2
	NEVS □	-5	D	-750	600	9.66	28.9	1176	588	1.68	10.1	30.4
	NEVS □	-5	E	-1000	600	9.86	29.6	1470	735	2.97	27.1	81.2
	NEVS □	-5	E	-1500	600	17.8	53.5	1470	735	2.97	27.1	81.2
	NEVS □	-5	E	-2000	600	25.8	77.3	1470	735	2.97	27.1	81.2
1/9	NEVS □	-9	B	-100	333	2.32	6.96	1176	588	0.0978	2.41	7.25
	NEVS □	-9	C	-200	333	4.64	13.9	1176	588	0.493	8.83	26.5
	NEVS □	-9	D	-400	333	7.37	22.1	1176	588	0.629	9.73	29.2
	NEVS □	-9	D	-750	333	17.4	52.1	1176	588	1.42	18.2	54.7
	NEVS □	-9	E	-1000	333	17.8	53.3	1470	735	2.35	48.7	146
	NEVS □	-9	E	-1500	333	32.1	96.2	1470	735	2.35	48.7	146
	NEVS □	-9	E	-2000	333	46.4	139	1470	735	2.35	48.7	146
1/15	NEVS □	-15	B	-100	200	3.87	11.6	1470	735	0.0535	4.07	12.2
	NEVS □	-15	C	-200	200	7.73	23.1	1470	735	0.323	8.83	26.5
	NEVS □	-15	D	-400	200	15.4	46.3	1470	735	0.365	16.2	48.6
	NEVS □	-15	E	-750	200	28.9	86.9	1764	882	0.962	29.2	87.6
	NEVS □	-15	E	-1000	200	38.7	116	1764	882	1.75	40.6	122
1/27	NEVS □	-27	B	-100	111	6.96	20.9	1470	735	0.0357	7.31	21.9
	NEVS □	-27	D	-200	111	10.7	32.0	1470	735	0.228	29.1	79.1
	NEVS □	-27	D	-400※	111	27.8	79.1	1470	735	0.228	29.1	79.1
	NEVS □	-27	E	-750	111	52.2	157	1764	882	0.599	54.6	164
1/45	NEVS □	-45	C	-100	66	11.6	34.8	1764	885	0.608	12.1	36.5
	NEVS □	-45	D	-200	66	23.2	69.6	1764	885	0.749	29.1	79.1
	NEVS □	-45	E	-400	66	46.4	139	2070	1035	1.38	56.8	170
1/75	NEVS □	-75	D	-100	40	19.3	58.0	2070	1035	0.507	29.1	79.1
	NEVS □	-75	E	-200	40	38.7	116	2370	1185	0.809	56.8	170
1/105	NEVS □	-105	D	-100※	28	27.1	79.1	2370	1185	0.462	29.1	79.1
	NEVS □	-105	E	-200	28	54.1	162	2670	1335	0.694	56.8	170

Note 1) The moment of inertia of input shaft conversion is only a numerical value for the reducer and thus does not include that of the motor.
Note 2) Set the maximum input speed to 5000rpm and 3000rpm or less at usual times.
Note 3) Radial load is an indication at the center of the output shaft.
Note 4) Types indicated with may become an overload state if load is given by max. instantaneous time torque of the motor, so please use it to the extent ※ of max. permissible instantaneous output torque of the reducer.

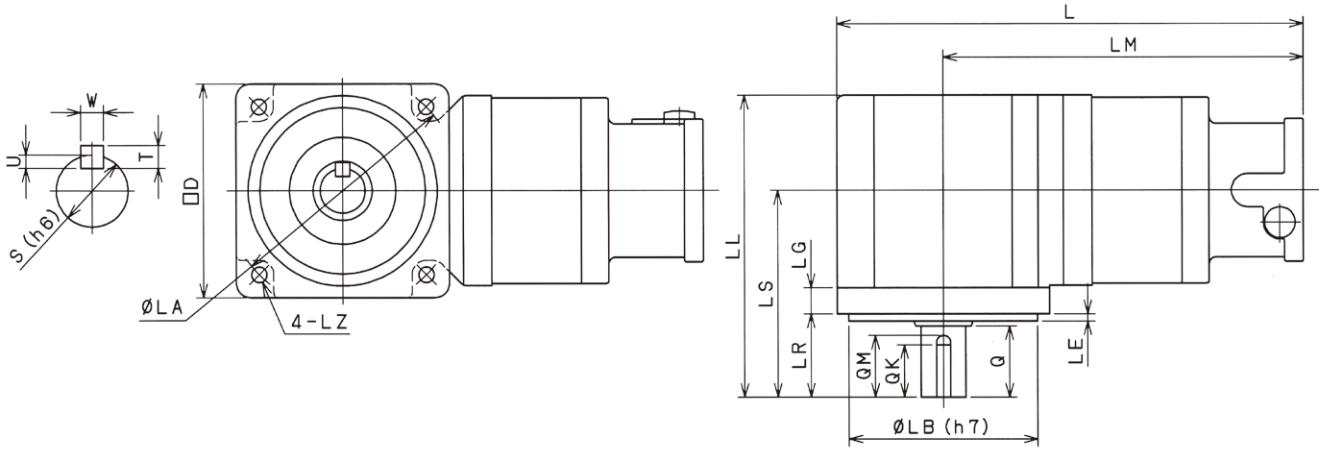

Type No.	Reduction ratio	Motor capacity W	Length L	LM	LL	LS	LR	LG	Output shaft Q	QM	QK	S	W×U	T	Flange D	LB	LA	LE	LZ
B	3	100	144.5	105.5	124	85	35	10	30	26	22	19	6×3.5	6	78	70	90	3	6.5
	3	200	149.5	110.5	124	85	35	10	30	26	22	19	6×3.5	6	78	70	90	3	6.5
	3	400	149.5	110.5	124	85	35	10	30	26	22	19	6×3.5	6	78	70	90	3	6.5
	5	100	163.5	124.5	124	85	35	10	30	26	22	19	6×3.5	6	78	70	90	3	6.5
	5	200	168.5	129.5	124	85	35	10	30	26	22	19	6×3.5	6	78	70	90	3	6.5
	9	100	163.5	124.5	124	85	35	10	30	26	22	19	6×3.5	6	78	70	90	3	6.5
	15	100	163.5	124.5	124	85	35	10	30	26	22	19	6×3.5	6	78	70	90	3	6.5
	27	100	163.5	124.5	124	85	35	10	30	26	22	19	6×3.5	6	78	70	90	3	6.5
C	3	750	171.5	126.5	127	87	35	11	30	26	22	19	6×3.5	6	90	80	100	3	6.5
	3	1000	171.5	126.5	127	87	35	11	30	26	22	19	6×3.5	6	90	80	100	3	6.5
	5	400	197.5	152.5	127	87	35	11	30	26	22	19	6×3.5	6	90	80	100	3	6.5
	9	200	197.5	152.5	127	87	35	11	30	26	22	19	6×3.5	6	90	80	100	3	6.5
	15	200	197.5	152.5	127	87	35	11	30	26	22	19	6×3.5	6	90	80	100	3	6.5
	45	100	208	163	127	87	35	11	30	26	22	19	6×3.5	6	90	80	100	3	6.5
D	3	1500	211.5	154	164	114	48	14	40	35	30	24	8×4	7	115	110	130	5	8.8
	3	2000	211.5	154	164	114	48	14	40	35	30	24	8×4	7	115	110	130	5	8.8
	3	2500	211.5	154	164	114	48	14	40	35	30	24	8×4	7	115	110	130	5	8.8
	5	750	229	171.5	164	114	48	14	40	35	30	24	8×4	7	115	110	130	5	8.8
	9	400	225	167.5	164	114	48	14	40	35	30	24	8×4	7	115	110	130	5	8.8
	9	750	229	171.5	164	114	48	14	40	35	30	24	8×4	7	115	110	130	5	8.8
	15	400	225	167.5	164	114	48	14	40	35	30	24	8×4	7	115	110	130	5	8.8
	27	200	225	167.5	164	114	48	14	40	35	30	24	8×4	7	115	110	130	5	8.8
	27	400	225	167.5	164	114	48	14	40	35	30	24	8×4	7	115	110	130	5	8.8
	45	200	235.5	178	164	114	48	14	40	35	30	24	8×4	7	115	110	130	5	8.8
	75	100	235.5	178	164	114	48	14	40	35	30	24	8×4	7	115	110	130	5	8.8
	105	100	235.5	178	164	114	48	14	40	35	30	24	8×4	7	115	110	130	5	8.8
E	3	3000	239.5	167	183	133	63	14	55	52	45	32	10×5	8	145	130	165	5	11
	3	3500	239.5	167	183	133	63	14	55	52	45	32	10×5	8	145	130	165	5	11
	3	4000	239.5	167	183	133	63	14	55	52	45	32	10×5	8	145	130	165	5	11
	5	1000	282.5	210	183	133	63	14	55	52	45	32	10×5	8	145	130	165	5	11
	5	1500	282.5	210	183	133	63	14	55	52	45	32	10×5	8	145	130	165	5	11
	5	2000	282.5	210	183	133	63	14	55	52	45	32	10×5	8	145	130	165	5	11
	9	1000	282.5	210	183	133	63	14	55	52	45	32	10×5	8	145	130	165	5	11
	9	1500	282.5	210	183	133	63	14	55	52	45	32	10×5	8	145	130	165	5	11
	9	2000	282.5	210	183	133	63	14	55	52	45	32	10×5	8	145	130	165	5	11
	15	750	264	191.5	183	133	63	14	55	52	45	32	10×5	8	145	130	165	5	11
	15	1000	282.5	210	183	133	63	14	55	52	45	32	10×5	8	145	130	165	5	11
	27	750	264	191.5	183	133	63	14	55	52	45	32	10×5	8	145	130	165	5	11
	45	400	270.5	198	183	133	63	14	55	52	45	32	10×5	8	145	130	165	5	11
	75	200	270.5	198	183	133	63	14	55	52	45	32	10×5	8	145	130	165	5	11
	105	200	270.5	198	183	133	63	14	55	52	45	32	10×5	8	145	130	165	5	11

Type no.	Suitable R snap ring	LL	LD	LC
B	R13	96	30	22
C	R17	99	30	22
D	R24	127	45	22
E	R32	131	50	22

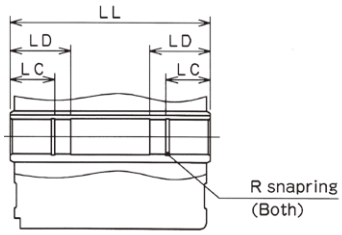

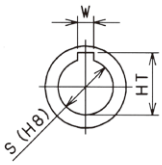

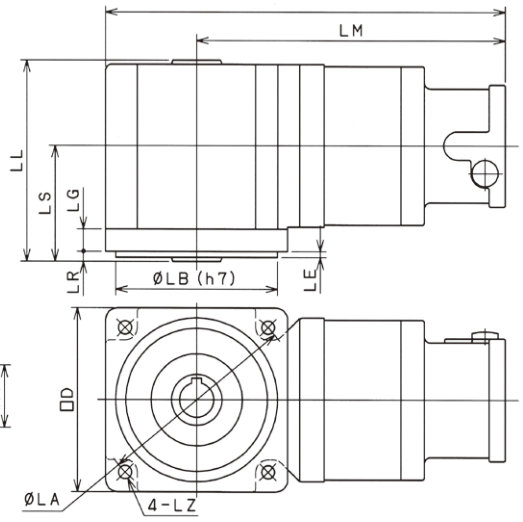

Type no.	Reduction ratio	Motor cap. W	Length L	LM	LL	LS	LR	LG	Output shaft S	W	HT	Flange D	LB	LA	LE	LZ
B	3	100	144.5	105.5	96	55	5	10	13	5	15	78	70	90	3	6.5
	3	200	149.5	110.5	96	55	5	10	13	5	15	78	70	90	3	6.5
	3	400	149.5	110.5	96	55	5	10	13	5	15	78	70	90	3	6.5
	5	100	163.5	124.5	96	55	5	10	13	5	15	78	70	90	3	6.5
	5	200	168.5	129.5	96	55	5	10	13	5	15	78	70	90	3	6.5
	9	100	163.5	124.5	96	55	5	10	13	5	15	78	70	90	3	6.5
	15	100	163.5	124.5	96	55	5	10	13	5	15	78	70	90	3	6.5
	27	100	163.5	124.5	96	55	5	10	13	5	15	78	70	90	3	6.5
C	3	750	171.5	126.5	99	57	5	11	17	5	19	90	80	100	3	6.5
	3	1000	171.5	126.5	99	57	5	11	17	5	19	90	80	100	3	6.5
	5	400	197.5	152.5	99	57	5	11	17	5	19	90	80	100	3	6.5
	9	200	197.5	152.5	99	57	5	11	17	5	19	90	80	100	3	6.5
	15	200	197.5	152.5	99	57	5	11	17	5	19	90	80	100	3	6.5
	45	100	208	163	99	57	5	11	17	5	19	90	80	100	3	6.5
D	3	1500	211.5	154	127	74	8	14	24	8	27	115	110	130	5	8.8
	3	2000	211.5	154	127	74	8	14	24	8	27	115	110	130	5	8.8
	3	2500	211.5	154	127	74	8	14	24	8	27	115	110	130	5	8.8
	5	750	229	171.5	127	74	8	14	24	8	27	115	110	130	5	8.8
	9	400	225	167.5	127	74	8	14	24	8	27	115	110	130	5	8.8
	9	750	229	171.5	127	74	8	14	24	8	27	115	110	130	5	8.8
	15	400	225	167.5	127	74	8	14	24	8	27	115	110	130	5	8.8
	27	200	225	167.5	127	74	8	14	24	8	27	115	110	130	5	8.8
	27	400	225	167.5	127	74	8	14	24	8	27	115	110	130	5	8.8
	45	200	235.5	178	127	74	8	14	24	8	27	115	110	130	5	8.8
	75	100	235.5	178	127	74	8	14	24	8	27	115	110	130	5	8.8
	105	100	235.5	178	127	74	8	14	24	8	27	115	110	130	5	8.8
E	3	3000	239.5	167	131	78	8	14	32	10	35	145	130	165	5	11
	3	3500	239.5	167	131	78	8	14	32	10	35	145	130	165	5	11
	3	4000	239.5	167	131	78	8	14	32	10	35	145	130	165	5	11
	5	1000	282.5	210	131	78	8	14	32	10	35	145	130	165	5	11
	5	1500	282.5	210	131	78	8	14	32	10	35	145	130	165	5	11
	5	2000	282.5	210	131	78	8	14	32	10	35	145	130	165	5	11
	9	1000	282.5	210	131	78	8	14	32	10	35	145	130	165	5	11
	9	1500	282.5	210	131	78	8	14	32	10	35	145	130	165	5	11
	9	2000	282.5	210	131	78	8	14	32	10	35	145	130	165	5	11
	15	750	264	191.5	131	78	8	14	32	10	35	145	130	165	5	11
	15	1000	282.5	210	131	78	8	14	32	10	35	145	130	165	5	11
	27	750	264	191.5	131	78	8	14	32	10	35	145	130	165	5	11
	45	400	270.5	198	131	78	8	14	32	10	35	145	130	165	5	11
	75	200	270.5	198	131	78	8	14	32	10	35	145	130	165	5	11
	105	200	270.5	198	131	78	8	14	32	10	35	145	130	165	5	11

Operating Mechanism

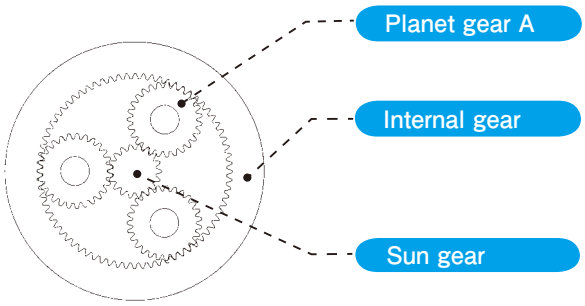

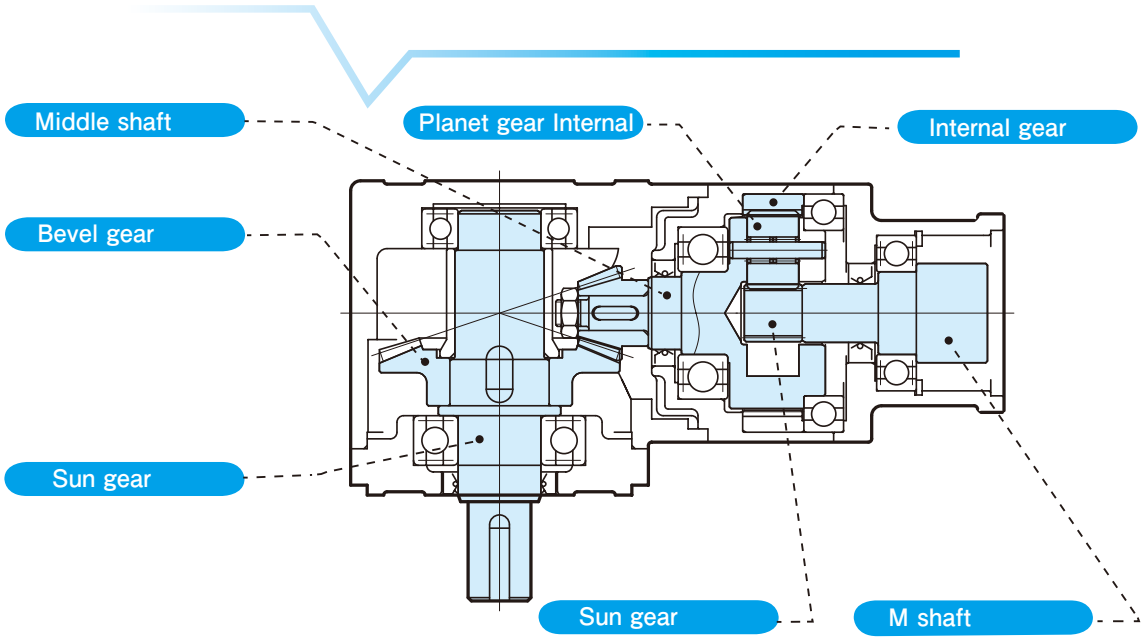

1step reduction part

Motor~input gear~planet gear~middle shaft

Rotation from the motor is delivered by the input gear attached to the M shaft. The input gear makes the planet gear A contacting the internal gear A go in gear. This transmits orbital motion to the planet gear A and rotates the 2step sun gear through the carrier.

The rotating direction is same as input otation.

2step reduction part

Middle shaft~sun gear~planet gear~output shaft

Rotation of the middle shaft is delivered by the sun gear attached to the bevel gear. This transmission rotates the output shaft by making the bevel gear rotate in gear.

The rotating direction is same as input otation.

The above mention is explanation for the 2step reducer.
The 1step reducer runs only under the operating mechanism of the 2step reduction part.

Examples of type selection

1

[Operating pattern]

At operation : $T_1 = 50$ (Nm) $t_1 = 0.5$ (sec) $n_1 = 50$ (rpm)
At normal operation : $T_2 = 20$ (Nm) $t_2 = 5$ (sec) $n_2 = 100$ (rpm)
At reduction : $T_3 = -40$ (Nm) $t_3 = 1$ (sec) $n_3 = 50$ (rpm)
At stop : $T_4 = 0$ (Nm) $t_4 = 10$ (sec) $n_4 = 0$ (rpm)

[Max. number of revolutions]

Max. output speed : $n_{OUT} = 300$ (rpm)
Max. input speed : $n_{IN} = 5000$ (rpm) (モータにより制限)

OK

2

Calculate mean load torque given to the output shaft from the load torque pattern. Mean load torque : T_a (N・m)

$$T_a = \sqrt[3]{\frac{50 \times 0.5 \times |50|^3 + 100 \times 5 \times |20|^3 + 50 \times 1 \times |-40|^3 + 0}{50 \times 0.5 + 100 \times 5 + 50 \times 1 + 0}}$$

$= 26.2$ (Nm)

Calculate mean output speed from the load torque pattern..
Mean output speed : n_{aOUT} (rpm)

$$n_{aOUT} = \frac{50 \times 0.5 + 100 \times 5 + 50 \times 1 + 0}{0.5 + 5 + 1 + 10} = 34.8 \text{ (rpm)}$$

OK

3

Provisionally select the type.

$26.2 \leqq 29.2$ (Nm)

(Select 15E-750 from the performance table)

OK

4

Determine reduction ratio (R) from max. output speed (n_{OUT}) and max. input speed (n_{IN}).

$$\frac{5000}{300} = 16.7 \geqq 15$$

Calculate max. input speed (n_{IN}) from max. output speed (n_{OUT}) and reduction ratio (R).

$n_{IN} = 300 \times 15 = 4{,}500$ (rpm)

OK

5

Calculate mean input speed n_{aIN} from mean output speed n_{aOUT} and reduction ratio (R).

$n_{aIN} = 34.8 \times 15 = 522 \leqq 3{,}000$ (rpm)

OK

6

Ensure that max. input speed is less than the fixed max. input speed.

$n_{IN} = 4{,}500 \leqq 5{,}000$ (rpm)

OK

7

Ensure that T_1 and T_3 are within the numerical values of max. instant time permissible output torque in the performance table.

$T_1 = 50 \leqq 87.6$ (Nm)
$T_3 = 40 \leqq 87.6$ (Nm)

OK

Fixed to 25E-750

Permissible radial load

Solid shaft radial

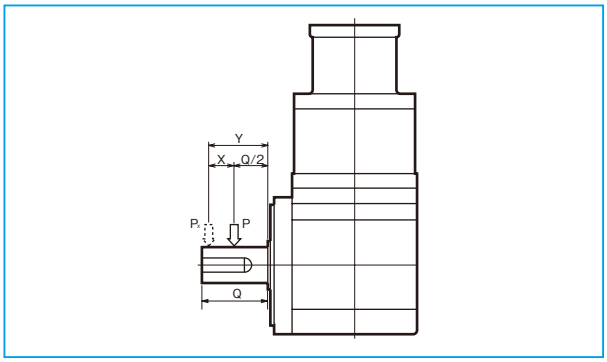

Hollow shaft radial

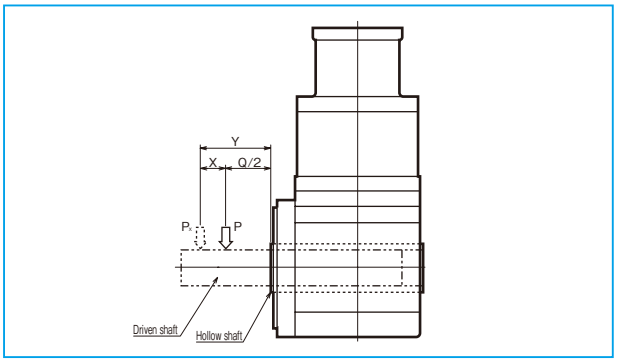

※被動軸の強度についてはお客様にてご確認ください。

If radial load is beyond the center of the output shaft, calculate using the following equation and positive numbers:

$P_X = \{K/(K+X)\} \times P$
$X = Y - Q / 2$

P : Permissible radial load(N)
Q : Positive number
K : Positive number
X : Load point displacement distance(mm)
Y : Load point(mm)
Px : Permissible shaft load(N)

Type No.	Positive No.:Q	Positive No.:K
B	30	94.5
C	30	97.5
D	40	128
E	55	138.5

1. Insertion into motor

If a customer personally assembles the servo motor and reducer please use the following tip. The reducer flange to which the servo motor is attached has different dimensions based on the motor specified. Therefore, assembly may be impossible for any other motor. Make sure the correct motor is specified before ordering the reducer.

[In case of jointing the motor without key]

① Take off the rubber cap, turn the input shaft, and match the head of the bolt to the hole of the rubber cap. Make sure that the set bolt is loosened.
② Gradually put the motor shaft into the input shaft (Ensure that it is smoothly put in without jam.) Be careful not to be inserted with the motor tilted.
③ Attach the motor to the reducer and fasten the bolt with designated fastening torque. See Table 1.
④ Fasten the set bolt of the input shaft with designated fastening torque using torque wrench, etc. See Table 2.
⑤ Attach a rubber cap. It is the end of assembling.

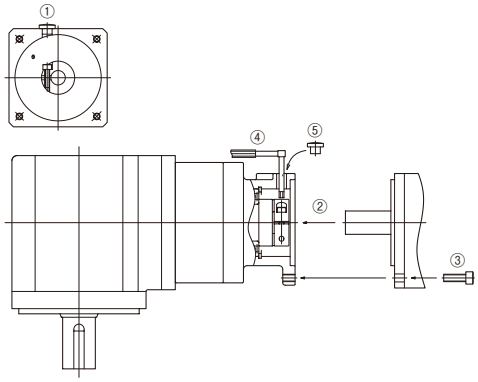

■ Table 1

Motor jointing bolt	Fastening torque	
	N・m	kgf・cm
M3	1.0	10
M4	2.9	30
M5	5.9	60
M6	9.8	100
M8	19.6	200
M10	39.2	400
M12	68.6	700
M16	162	1650

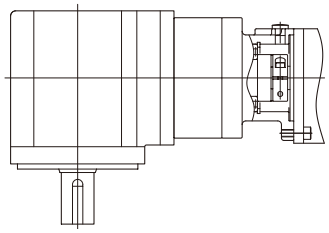

■ Table 2

Motor jointing bolt	Fastening torque	
	N・m	kgf・cm
M3	1.5	15
M4	3.5	36
M5	7.1	72
M6	12	122
M8	30	306

If the key of the motor of key attachment type is eliminated, motor jointing without the above-mentioned key may be followed. There is no risk of deviation.

[In case of jointing the motor with key]

① Take off the rubber cap, turn the input shaft, and match the head of the bolt to the hole of the rubber cap.
② Coat carbon formation inhibitors (molybdenum dioxide etc.) onto the motor shaft, match the key to the key slot, and gradually put it in the input shaft (Ensure that it is smoothly put in without jam.). Be careful not to be inserted with the motor tilted.
③ Combine the motor with the reducer and fasten with the designated fastening bolt. See Table 1.
④ For set bolt of the input shaft, fasten using torque wrench with the designated fastening torque with the key firmly pressed. See Table 3.
⑤ Attach a rubber cap. The is the end.

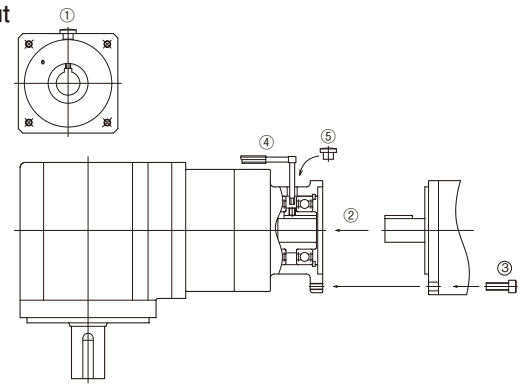

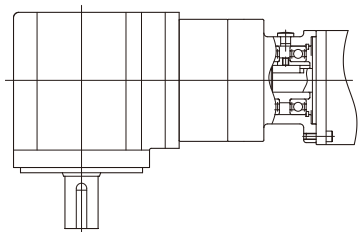

■ Table 3

Motor jointing bolt	Fastening torque	
	N・m	kgf・cm
M4	2.0	20
M5	4.3	44
M6	7.3	74
M8	16.8	171

2. Jointing with reducer

Whenever jointing the reducer with a device, ensure that the jointing side is flat without protrusion, and then fasten the bolt with designated fastening torque using torque wrench. See Table 4.

■ Table 4

Reducer jointing bolt		Fastening torque	
		N・m	kgf・cm
B,C types	M6	9.8	100
D types	M8	19.6	200
E types	M10	39.2	400

3. Jointing to the output shaft

Precautions

- When attaching a coupling, free, etc. onto the output shaft, make sure that excessive thrust load not be given to the output shaft.
- In case of strongly hitting the shaft with a hammer, the shaft inlet or the inside of the reducer may be damaged, therefore it shall be prohibited.
- If the shaft or key of a coupling to be attached is large, it may cause carbonization, so be careful when assembling.
- For assembling of a coupling, fix the key with a set bolt.
- When connecting the shaft, ensure that the connecting shaft fully goes out.

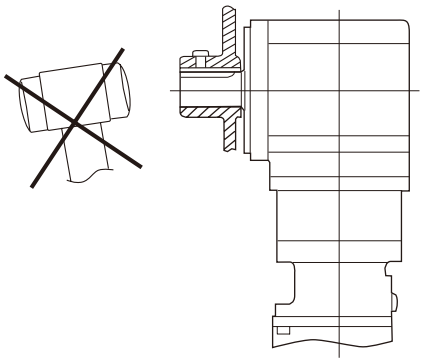

Jointing to NEV-series hollow shaft type

Whenever inserting the driven shaft into the hollow shaft, coat carbon formation inhibitors (molybdenum dioxide etc.) onto the shafts, and carefully insert the key in a set. If the shaft is inserted with a strong hit, the axis or the inside of the reducer may be damaged, so such a behavior is prohibited.

If there is a need to fix the driven shaft to the hollow shaft, the following fixing methods are available:

1) If there is differential on the driven shaft
- Attach a snap ring onto the hollow shaft, insert the collar, and then fix the driven shaft with a bolt (Figure A).
- Insert the collar using the cross section of the hollow shaft and fix the driven shaft with a bolt. (Figure B).

2) If there is no differential on the driven shaft
Attach a snap ring onto the hollow shaft, put the collars in both sides of the snap ring, and then fix the driven shaft with a bolt (Figure C).

3) How to eliminate from the hollow shaft
Make sure that excessive pressure is not applied between the casing and the hollow shaft.
As shown in Figure D, it is possible to conveniently remove it using Jig. Design the driven shaft as short as possible according to thickness of the collar.

Note) Customers must prepare jointing, fixing, and removing parts.

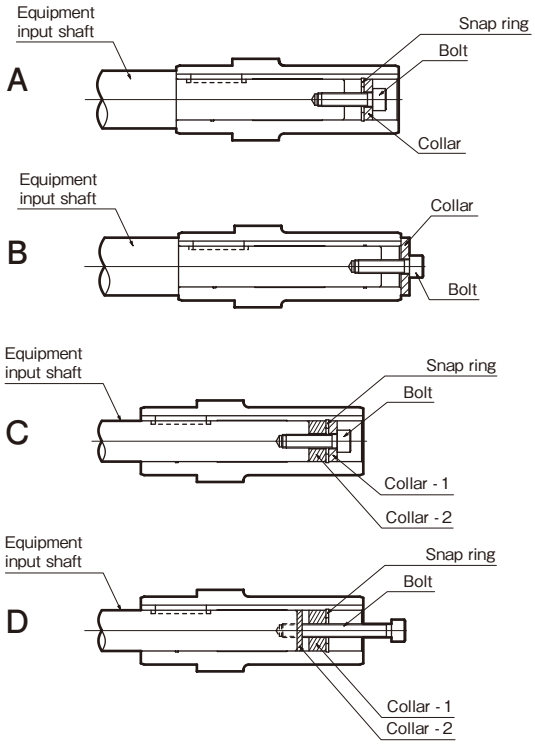

ABLE REDUCER EVRG Series

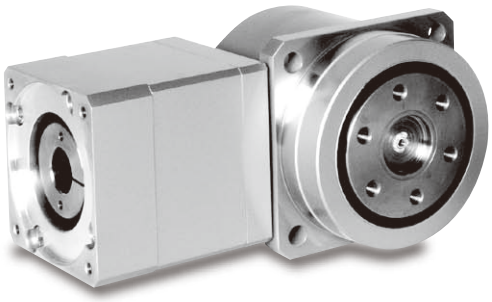

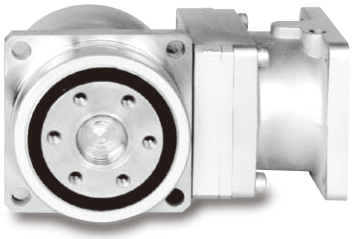

Right angle shaft type responding to space-saving jointing

A new precision-type reducer

Backlash **3** arc-min (0.05°)

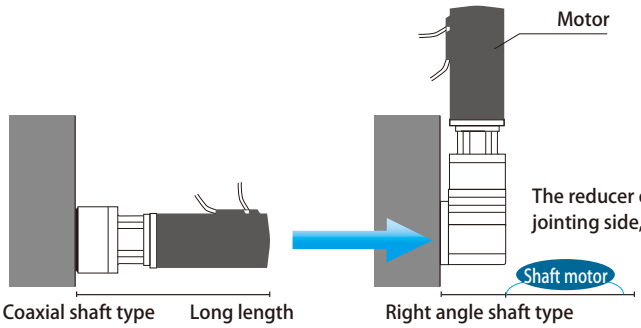

The reducer output shaft is in the center of the jointing side, so jointing mode may be free changed.

Same size

Coaxial shaft type
VRG series

EVRG series
right angle shaft type

It is possible to shorten length in output shaft direction of the reducer.

Dimensions of the jointing side are same as those of our VRG series (coaxial shaft type).

Uses less space to take advantage of a compact servo motor

Realizes high strength by the newly adopted cross roller bearing

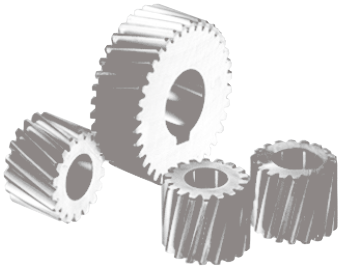

Maintenance free & free jointing

No need for replacement by using long-life high grade grease as lubricant. In addition, grease lubricant allows mounting in any position with no modifications.

Compatible with servo motors of the following makers :

●PANASONIC ●FANUC ● NIKKI DENSO ●YASKAWA ELECTRIC ●SHIMPONIA TECHNOLOGY
●MIKI PULLEY ●MITSUBISHI ELECTRIC ●TOSHIBA MACHINE ●HITACHI INDUSTRIAL EQUIPMENT SYSTEMS
●OMRON ●SANYO DENKI ●KEYENCE ●TAMAGAWA SEIKI ●FUJI ELECTRIC SYSTEMS ●SANMEI ●NIDEC SANKYO

※Jointing may be impossible according to each maker's motor series. For more details, contact us.

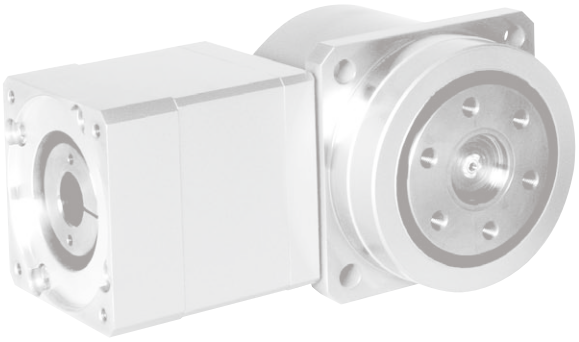

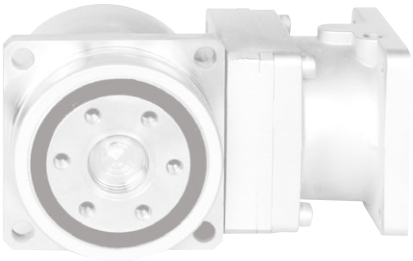

Precision right angle shaft type reducer for servo motor EVRG

Reduction ratio 1 / 5 ~ 1 / 27, motor capacity 100W ~ 7kW series

Broadly compatible with a range of servo motor from small to large sizes

■ Type & model no.

ABLE REDUCER | Servo motor

EVR G F - 11 C90 - 400 - ☐ - ☐

- Type No.
- Manufacturer name
- Applicable servo motor cap. (W)
- Reducer type no. B60 C90 D120 E170
- Reduction ratio : 7, 7, 11, 15, 27
  The reduction ratios are actual ones.
- Output shaft type / F : Flange output type S : Extended shaft output type
- Precision reducer series Backlash 3 min (0.05°)
- Name of the precision right angle shaft of the ABLE REDUCER for servo motor

■ Reduction ratio & type No.

If input speed is 3000rpm

B60 C90 D120 E170

Motor cap.(W) \ Reduction ratio	1/5	1/7	1/11	1/15	1/27
100					
200		B60P			
400					
750		C90			
1000					
1500					
2000		D120			
2500					
3000					
3500					
4000		E170			
5000					
7000					

★生産受注品

Performance Table

■ Basic performance of reducer (B ~ D types : input 3000rpm, E type : input 2000rpm)

Rated number of revolutions	Reducer type no.	Reduction ratio	Permissible output torque ※1	Max. permissible output torque ※2	Mean permissible input number of revolutions ※3	Max. permissible input number of revolutions ※4	Permissible radial load N		Permissible thrust load ※7	Permissible moment ※8
							Flange ※5	Output shaft ※6		
min^{-1}			Nm	Nm	min^{-1}	min^{-1}			N	Nm
3000	B60P	7	6.26	14.7	3000	5000	672	245	927	38
		11	7.12	21.4			769	280	927	
		15	7.4	22.2			844	308	927	
	C90	5	17.5	52.4	3000	5000	1170	491	1746	138
		7	25.4	76.1			1294	544	1931	
		11	28.6	85.9			1482	622	2212	
		15	31.7	95.2			1626	683	2428	
		27	26.4	79.3			1940	815	2650	
	D120	5	45.6	136	3000	5000	2042	768	3048	360
		7	81.5	200			2259	850	3372	
		11	85.3	213			2587	973	3740	
		15	81.9	245			2840	1068	3740	
		27	53.2	159			3387	1274	3740	
2000	E170	5	112	338	2000	4200	4582	1918	6838	1037
		7	177	531			5068	2122	7564	
		11	191	528			5804	2430	8663	
		15	181	543		5000	6370	2667	9508	
		27	133	401			7599	3181	10800	

※1 Permissible output torque is a numerical value in 20000 hours of life time.
※2 Max. permissible output torque is a numerical value permissible at starting and stopping.
※3 Mean permissible input number of revolutions is the maximum numerical value of mean input number of revolutions during operation.
※4 Max. permissible input number of revolutions is the maximum input number of revolutions under conditions of no successive operation.
※5 Permissible radial load(flange) is a numerical value acting on the cross roller axis(thrust load zero).
※6 Permissible radial load(output shaft) is a numerical value acting on the center of the output shaft(thrust load zero).
※7 Permissible thrust load is a numerical value acting on the center of the output shaft(radial load zero).
※8 Permissible moment is the permissible maximum numerical value.

EVRGF

■Flange output type

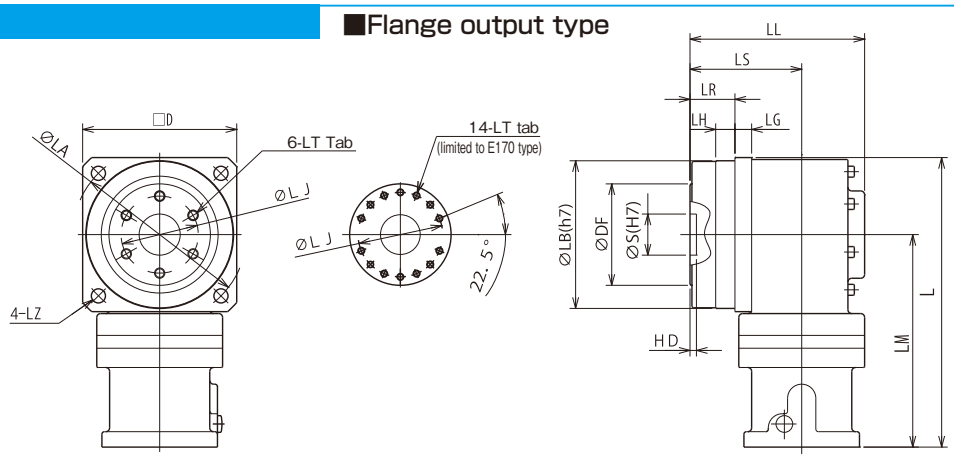

Type no.	Reduction ratio	Motor cap. W	Length							Output shaft			Flange					
			L	LM	LL	LS	LR	LG	LH	S	DF	HD	D	LB	LA	LJ	LT	LZ
B60P	7	100	124	94	69	48	21	8	6.5	14	38	5	60	56	70	30	M4 depth 7	5.5
	7	200	129	99	69	48	21	8	6.5	14	38	5	60	56	70	30	M4 depth 7	5.5
	11	100	124	94	69	48	21	8	6.5	14	38	5	60	56	70	30	M4 depth 7	5.5
	11	200	129	99	69	48	21	8	6.5	14	38	5	60	56	70	30	M4 depth 7	5.5
	15	100	124	94	69	48	21	8	6.5	14	38	5	60	56	70	30	M4 depth 7	5.5
C90	5	400	163.5	118.5	98	64	24	10	8	24	58	5	90	85	105	45	M6 depth 10	9
	5	750	167.5	122.5	98	64	24	10	8	24	58	5	90	85	105	45	M6 depth 10	9
	5	1000	173.5	128.5	98	64	24	10	8	24	58	5	90	85	105	45	M6 depth 10	9
	7	400	163.5	118.5	98	64	24	10	8	24	58	5	90	85	105	45	M6 depth 10	9
	7	750	167.5	122.5	98	64	24	10	8	24	58	5	90	85	105	45	M6 depth 10	9
	7	1000	173.5	128.5	98	64	24	10	8	24	58	5	90	85	105	45	M6 depth 10	9
	11	400	163.5	118.5	98	64	24	10	8	24	58	5	90	85	105	45	M6 depth 10	9
	11	750	167.5	122.5	98	64	24	10	8	24	58	5	90	85	105	45	M6 depth 10	9
	15	200	163.5	118.5	98	64	24	10	8	24	58	5	90	85	105	45	M6 depth 10	9
	15	400	163.5	118.5	98	64	24	10	8	24	58	5	90	85	105	45	M6 depth 10	9
	27	100	163	118	98	64	24	10	8	24	58	5	90	85	105	45	M6 depth 10	9
	27	200	163.5	118.5	98	64	24	10	8	24	58	5	90	85	105	45	M6 depth 10	9
D120	5	1500	225.5	165.5	136	87	35	13	15	32	79	5	120	115	135	60	M8 depth 12	11
	5	2000	225.5	165.5	136	87	35	13	15	32	79	5	120	115	135	60	M8 depth 12	11
	5	2500	225.5	165.5	136	87	35	13	15	32	79	5	120	115	135	60	M8 depth 12	11
	7	1500	225.5	165.5	136	87	35	13	15	32	79	5	120	115	135	60	M8 depth 12	11
	7	2000	225.5	165.5	136	87	35	13	15	32	79	5	120	115	135	60	M8 depth 12	11
	7	2500	225.5	165.5	136	87	35	13	15	32	79	5	120	115	135	60	M8 depth 12	11
	11	1000	225.5	165.5	136	87	35	13	15	32	79	5	120	115	135	60	M8 depth 12	11
	11	1500	225.5	165.5	136	87	35	13	15	32	79	5	120	115	135	60	M8 depth 12	11
	11	2000	225.5	165.5	136	87	35	13	15	32	79	5	120	115	135	60	M8 depth 12	11
	15	750	207	147	136	87	35	13	15	32	79	5	120	115	135	60	M8 depth 12	11
	15	1000	225.5	165.5	136	87	35	13	15	32	79	5	120	115	135	60	M8 depth 12	11
	15	1500	225.5	165.5	136	87	35	13	15	32	79	5	120	115	135	60	M8 depth 12	11
	27	400	203	143	136	87	35	13	15	32	79	5	120	115	135	60	M8 depth 12	11
E170	5	3000	306	221	195	127	53	16	22	47	120	6	170	165	190	100	M8 depth 12	14
	5	3500	306	221	195	127	53	16	22	47	120	6	170	165	190	100	M8 depth 12	14
	5	4000	306	221	195	127	53	16	22	47	120	6	170	165	190	100	M8 depth 12	14
	5	5000	306	221	195	127	53	16	22	47	120	6	170	165	190	100	M8 depth 12	14
	5	7000	318	233	195	127	53	16	22	47	120	6	170	165	190	100	M8 depth 12	14
	7	3000	306	221	195	127	53	16	22	47	120	6	170	165	190	100	M8 depth 12	14
	7	3500	306	221	195	127	53	16	22	47	120	6	170	165	190	100	M8 depth 12	14
	7	4000	306	221	195	127	53	16	22	47	120	6	170	165	190	100	M8 depth 12	14
	7	5000	306	221	195	127	53	16	22	47	120	6	170	165	190	100	M8 depth 12	14
	7	7000	318	233	195	127	53	16	22	47	120	6	170	165	190	100	M8 depth 12	14
	11	2500	296	211	195	127	53	16	22	47	120	6	170	165	190	100	M8 depth 12	14
	11	3000	306	221	195	127	53	16	22	47	120	6	170	165	190	100	M8 depth 12	14
	11	3500	306	221	195	127	53	16	22	47	120	6	170	165	190	100	M8 depth 12	14
	11	4000	306	221	195	127	53	16	22	47	120	6	170	165	190	100	M8 depth 12	14
	11	5000	306	221	195	127	53	16	22	47	120	6	170	165	190	100	M8 depth 12	14
	15	2000	296	211	195	127	53	16	22	47	120	6	170	165	190	100	M8 depth 12	14
	15	2500	296	211	195	127	53	16	22	47	120	6	170	165	190	100	M8 depth 12	14
	15	3000	306	221	195	127	53	16	22	47	120	6	170	165	190	100	M8 depth 12	14
	15	3500	306	221	195	127	53	16	22	47	120	6	170	165	190	100	M8 depth 12	14
	27	750	301	216	195	127	53	16	22	47	120	6	170	165	190	100	M8 depth 12	14
	27	1000	296	211	195	127	53	16	22	47	120	6	170	165	190	100	M8 depth 12	14
	27	1500	296	211	195	127	53	16	22	47	120	6	170	165	190	100	M8 depth 12	14

Dimensional Drawing & Table

EVRGS

■Extended output type

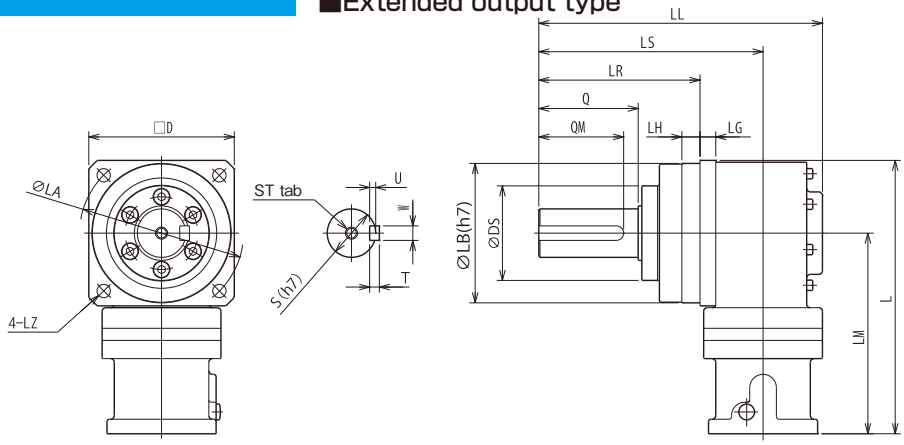

Type no.	Reduction ratio	Motor cap. W	Length							Output shaft							Flange			
			L	LM	LL	LS	LR	LG	LH	Q	QM	DS	S	ST	W×U	T	D	LB	LA	LZ
B60P	7	100	124	94	106	85	58	8	6.5	28	25	39	16	M4 depth 8	5×3	5	60	56	70	5.5
	7	200	129	99	106	85	58	8	6.5	28	25	39	16	M4 depth 8	5×3	5	60	56	70	5.5
	11	100	124	94	106	85	58	8	6.5	28	25	39	16	M4 depth 8	5×3	5	60	56	70	5.5
	11	200	129	99	106	85	58	8	6.5	28	25	39	16	M4 depth 8	5×3	5	60	56	70	5.5
	15	100	124	94	106	85	58	8	6.5	28	25	39	16	M4 depth 8	5×3	5	60	56	70	5.5
C90	5	400	163.5	118.5	151	117	77	10	8	42	36	58	25	M6 depth 12	8×4	7	90	85	105	9
	5	750	167.5	122.5	151	117	77	10	8	42	36	58	25	M6 depth 12	8×4	7	90	85	105	9
	5	1000	173.5	128.5	151	117	77	10	8	42	36	58	25	M6 depth 12	8×4	7	90	85	105	9
	7	400	163.5	118.5	151	117	77	10	8	42	36	58	25	M6 depth 12	8×4	7	90	85	105	9
	7	750	167.5	122.5	151	117	77	10	8	42	36	58	25	M6 depth 12	8×4	7	90	85	105	9
	7	1000	173.5	128.5	151	117	77	10	8	42	36	58	25	M6 depth 12	8×4	7	90	85	105	9
	11	400	163.5	118.5	151	117	77	10	8	42	36	58	25	M6 depth 12	8×4	7	90	85	105	9
	11	750	167.5	122.5	151	117	77	10	8	42	36	58	25	M6 depth 12	8×4	7	90	85	105	9
	15	200	163.5	118.5	151	117	77	10	8	42	36	58	25	M6 depth 12	8×4	7	90	85	105	9
	15	400	163.5	118.5	151	117	77	10	8	42	36	58	25	M6 depth 12	8×4	7	90	85	105	9
	27	100	163	118	151	117	77	10	8	42	36	58	25	M6 depth 12	8×4	7	90	85	105	9
	27	200	163.5	118.5	151	117	77	10	8	42	36	58	25	M6 depth 12	8×4	7	90	85	105	9
D120	5	1500	225.5	165.5	234	185	133	13	15	82	70	78	40	M10 depth 20	12×5	8	120	115	135	11
	5	2000	225.5	165.5	234	185	133	13	15	82	70	78	40	M10 depth 20	12×5	8	120	115	135	11
	5	2500	225.5	165.5	234	185	133	13	15	82	70	78	40	M10 depth 20	12×5	8	120	115	135	11
	7	1500	225.5	165.5	234	185	133	13	15	82	70	78	40	M10 depth 20	12×5	8	120	115	135	11
	7	2000	225.5	165.5	234	185	133	13	15	82	70	78	40	M10 depth 20	12×5	8	120	115	135	11
	7	2500	225.5	165.5	234	185	133	13	15	82	70	78	40	M10 depth 20	12×5	8	120	115	135	11
	11	1000	225.5	165.5	234	185	133	13	15	82	70	78	40	M10 depth 20	12×5	8	120	115	135	11
	11	1500	225.5	165.5	234	185	133	13	15	82	70	78	40	M10 depth 20	12×5	8	120	115	135	11
	11	2000	225.5	165.5	234	185	133	13	15	82	70	78	40	M10 depth 20	12×5	8	120	115	135	11
	15	750	207	147	234	185	133	13	15	82	70	78	40	M10 depth 20	12×5	8	120	115	135	11
	15	1000	225.5	165.5	234	185	133	13	15	82	70	78	40	M10 depth 20	12×5	8	120	115	135	11
	15	1500	225.5	165.5	234	185	133	13	15	82	70	78	40	M10 depth 20	12×5	8	120	115	135	11
	27	400	203	143	234	185	133	13	15	82	70	78	40	M10 depth 20	12×5	8	120	115	135	11
E170	5	3000	306	221	298	230	156	16	22	82	70	118	50	M10 depth 20	14×5.5	9	170	165	190	14
	5	3500	306	221	298	230	156	16	22	82	70	118	50	M10 depth 20	14×5.5	9	170	165	190	14
	5	4000	306	221	298	230	156	16	22	82	70	118	50	M10 depth 20	14×5.5	9	170	165	190	14
	5	5000	306	221	298	230	156	16	22	82	70	118	50	M10 depth 20	14×5.5	9	170	165	190	14
	5	7000	318	233	298	230	156	16	22	82	70	118	50	M10 depth 20	14×5.5	9	170	165	190	14
	7	3000	306	221	298	230	156	16	22	82	70	118	50	M10 depth 20	14×5.5	9	170	165	190	14
	7	3500	306	221	298	230	156	16	22	82	70	118	50	M10 depth 20	14×5.5	9	170	165	190	14
	7	4000	306	221	298	230	156	16	22	82	70	118	50	M10 depth 20	14×5.5	9	170	165	190	14
	7	5000	306	221	298	230	156	16	22	82	70	118	50	M10 depth 20	14×5.5	9	170	165	190	14
	7	7000	318	233	298	230	156	16	22	82	70	118	50	M10 depth 20	14×5.5	9	170	165	190	14
	11	2500	296	211	298	230	156	16	22	82	70	118	50	M10 depth 20	14×5.5	9	170	165	190	14
	11	3000	306	221	298	230	156	16	22	82	70	118	50	M10 depth 20	14×5.5	9	170	165	190	14
	11	3500	306	221	298	230	156	16	22	82	70	118	50	M10 depth 20	14×5.5	9	170	165	190	14
	11	4000	306	221	298	230	156	16	22	82	70	118	50	M10 depth 20	14×5.5	9	170	165	190	14
	11	5000	306	221	298	230	156	16	22	82	70	118	50	M10 depth 20	14×5.5	9	170	165	190	14
	15	2000	296	211	298	230	156	16	22	82	70	118	50	M10 depth 20	14×5.5	9	170	165	190	14
	15	2500	296	211	298	230	156	16	22	82	70	118	50	M10 depth 20	14×5.5	9	170	165	190	14
	15	3000	306	221	298	230	156	16	22	82	70	118	50	M10 depth 20	14×5.5	9	170	165	190	14
	15	3500	306	221	298	230	156	16	22	82	70	118	50	M10 depth 20	14×5.5	9	170	165	190	14
	27	750	301	216	298	230	156	16	22	82	70	118	50	M10 depth 20	14×5.5	9	170	165	190	14
	27	1000	296	211	298	230	156	16	22	82	70	118	50	M10 depth 20	14×5.5	9	170	165	190	14
	27	1500	296	211	298	230	156	16	22	82	70	118	50	M10 depth 20	14×5.5	9	170	165	190	14

Features & Merits

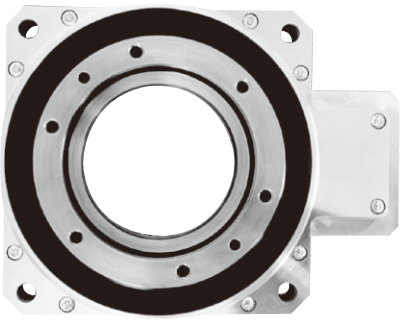

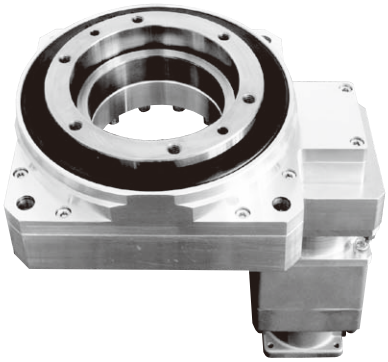

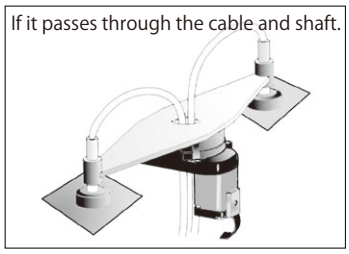

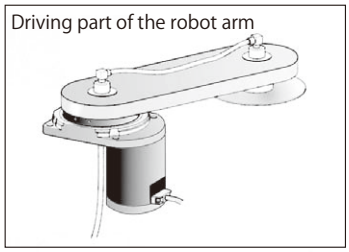

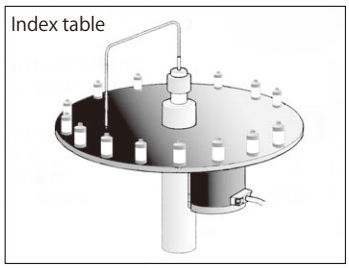

STH170

- Output shaft has large hollow center, to allow wires, hoses, and tubing to pass through.
- Standard servo motors of each supplier are combinable.
- A range of variations of reduction ratio
- The moment of inertia in the input side can be lowered so adjustment of the servo motor is simple.

■ Type & model no.

ABLE REDUCER | Servo motor

STH 170 - ☐ B - 100 - ☐ - ☐

- STH: Hollow reducer series type
- 170: Hollow reducer type no.
- ☐: Acceleration ratio : 12, 20, 36, 60, 80, 100, 140, 180, 324
- B: Input reducer type no.
  It differs by motor capacity and the reduction ratio. See the combination table.
- 100: Combination motor cap.
- ☐: Manufacturer
- ☐: Type No.

■ Reduction ratio & model no.

If input speed is 3000rpm

B C

Motor capacity \ Reduction ratio	12	20	36	60	80	100	140	180	324
50W									
100W									
200W									
400W	B				※	※			
750W	C								

※ mark indicates the Torque-Cut specification.

STH170-□B

Reduction ratio	Combined motor cap.	Permissible rated output torque	Permissible max. output torque	Permissible mean input speed	Permissible max. input speed	Permissible rated thrust load	Permissible max. thrust load	Permissible rated moment	Permissible max. moment	Backlash
	W	N・m	N・m	min^{-1}	min^{-1}	N	N	N・m	N・m	arc-min
12	400	8.09	24.3	3000	5000	3400	4000	132	200	2
20	200	5.45	16.4			3900		152		
36	100	3.57	11.0			4000		200		
60	100	10.0	30.3			4000		200		
80	100	14.4	43.2			4000		200		
100	50	7.88	23.9			4000		200		
	100	19.3	58.5			4000		200		
140	50	9.83	29.4			4000		200		

STH170-□C

Reduction ratio	Combined motor cap.	Permissible rated output torque	Permissible max. output torque	Permissible mean input speed	Permissible max. input speed	Permissible rated thrust load	Permissible max. thrust load	Permissible rated moment	Permissible max. moment	Backlash
	W	N・m	N・m	min^{-1}	min^{-1}	N	N	N・m	N・m	arc-min
12	750	21.4	64.3	3000	5000	3400	4000	132	200	2
20	400	19.4	58.3			3900		152		
	750	40.0	119			3900		152		
36	200・400	33.0	99.3			4000		200		
60	200・400	59.0	170			4000		200		
80	200・400	78.5	170			4000		200		
100	200	75.5	170			4000		200		
	400	85.0	170			4000		200		
140	100	46.1	138			4000		200		
	200	56.4	170			4000		200		
180	50・100	32.3	97.2			4000		200		
324	50	31.0	93.4			4000		200		

STH170

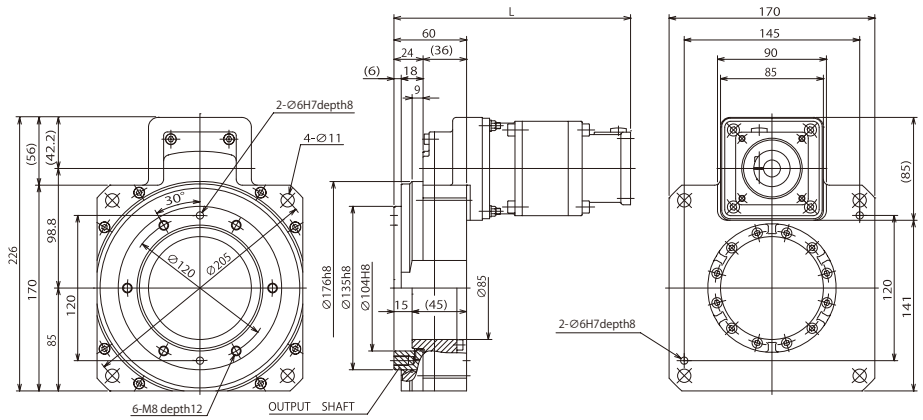

Type	Reduction ratio	L
STH170−□B	12・20	149.5
	36	144.5
	60・80・100・140	155
STH170−□C	12・20	199.5
	36	195.5
	60・80・100・140	206
	180・324	198

(mm)

※In the above table, the L dimensions may differ by the combined motor, so for more details, contact us.

For Servo Motor

CORONET Reducer

Features & Merits of Coronet Series for Servo Motor

ER series

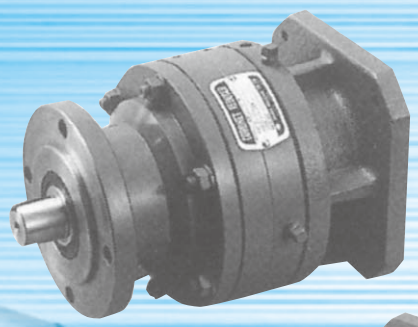

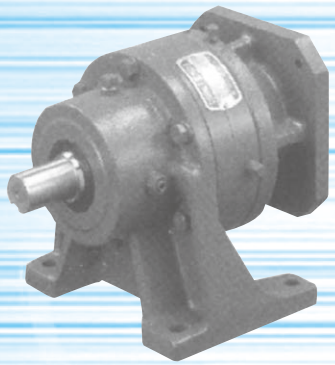

INDEX

For servo motor
ER series

INDEX

EF 3

EF 5

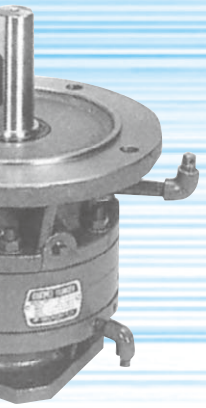

□ Type & Model Symbols	EF 5
□ Structured Diagram	EF 7
□ Theory	EF 7
□ Mechanism of Reduction	EF 8
□ Performance Table, In Case of 1000rpm	EF 9
□ Performance Table, In Case of 1500rpm	EF11
□ Performance Table, In Case of 2000rpm	EF13
□ Performance Table, In Case of 3000rpm	EF15
□ Panasonic (Dimensional Drawing), In Case of 2000rpm	EF17
□ Panasonic (Dimensional Drawing), In Case of 3000rpm	EF19
□ Mitsubishi (Dimensional Drawing), In Case of 1000rpm	EF21
□ Mitsubishi (Dimensional Drawing), In Case of 2000rpm	EF23
□ Mitsubishi (Dimensional Drawing), In Case of 3000rpm	EF25
□ Nikki (Dimensional Drawing), In Case of 2000rpm	EF27
□ Sanyo (Dimensional Drawing), In Case of 2000rpm	EF29
□ Sanyo (Dimensional Drawing), In Case of 3000rpm	EF31
□ Yaskawa (Dimensional Drawing), In Case of 1000rpm	EF33
□ Yaskawa (Dimensional Drawing), In Case of 1500rpm	EF35
□ Yaskawa (Dimensional Drawing), In Case of 2000rpm	EF37
□ Yaskawa (Dimensional Drawing), In Case of 3000rpm	EF39
□ Selection Procedure	EF41
□ Permissible Shaft Load	EF43
□ Permissible Input Speed / Internal Moment of Inertia / Lubricant	EF44

Displays outstanding features and capabilities.

For precision driving of heavy load, e.g. robot
For precision transporting units of machine tools
For positioning of X-Y table
For successive cutting and marking of materials (paper, steel plate, printing...)
For synchronous control of conveyor line
For high precision rotation of turntable
For driving part under large impact load of roller, or operation under frequent electricity failures

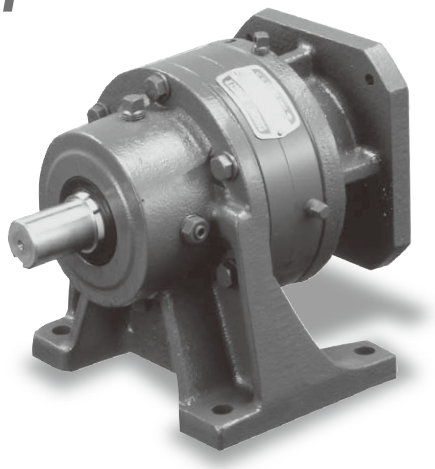

Motor capacity

Series ranging 100W~15kW

Reduction ratio

1step reduction	1/11～1/71
2step reduction	1/121～1/5041
3step reduction	1/5423～1/357911

Spec.

- No-backlash type 1step reducer
  1step reduction backlash to be '0.1 or less'※
- Standard type

※M type is less than 0.2°.

High-precision backlash to be '0.1° or less'

Less backlash to be 1/10 or less compared to our standard type. Exactly responds to high precision demands, e.g. positioning, instantaneous response
Displays the full characteristics of a servo motor without delayed control through solid operation.

※M type is 0.2° or less.

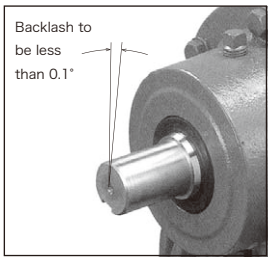

A servo reducer characterized by low internal moment of inertia

With an independent circle route type gear, it has low internal moment of inertia(J) and displays outstanding strength even upon starting, stopping, electricity/failure and reversal as necessary for driving of the servo.

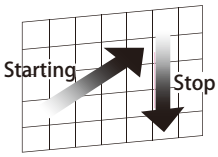

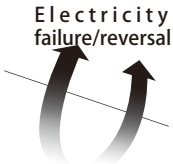

Directly compatible with each maker's servo motor

Flange attachment compatible with each maker's servo motor is standardized. The servo motors of most of domestic makers can be jointed. Also, it can respond to all types of the shaft, e.g. jointing, taper, straight type.

1 If the motor shaft is of key structure

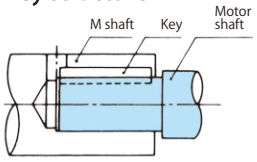

2 If the motor shaft is of tapertype

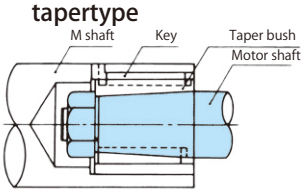

3 If the motor shaft is of straight shaft type (clamp disc type)

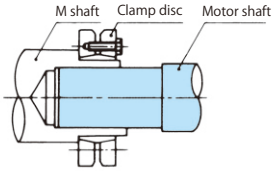

4 If the motor shaft is of straight shaft (direct clamp type)

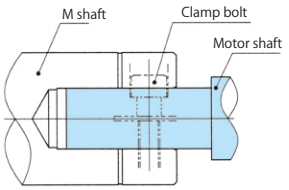

The jointing motor shaft diameter is of four types: Ø19・Ø22・Ø24・Ø28 (except some models)
※Compatible even with key structure, except for D cut

Attachable to servo motors of the following makers:

● PANASONIC ● MITSUBISHI ELECTRIC ● FANUC ● NIKKI DENSO ● SHIMPONIA TECHNOLOGY ● HITACHI SYSTEMS ● SANYO DENKI ● MIKI PULLEY ● YASKAWA ELECTRIC ● FUJI ELECTRIC SYSTEMS ● JAPAN RELIANCE ● ORIENTAL MOTOR ● KEYENCE ● SANMEI ● OMRON ● TAKAOKA MFG ● SAWAMURA DENKI INDUSTRIAL ● TOSHIBA MACHINE ● TAMAGAWA SEIKI ● WACO GIKEN

Strong torsional strength

With high internal strength, it can fully respond even to sharp load changes or severe load owing to little shaft torsions.

Optimal jointing forms selectable according to use, e.g. base, flange, ring mount jointing...

M~NF types

Reduction ratio : 1/11 ~ 1/5041

Base / flange / ring mount jointing

Broad variations

※ 3step reduction 1/55423~1/357911 available
※Semi-standard type with a reduction ratio of 1/3, 1/6, being manufactured currently(no-backlash spec. unavailable) (Permissible input speed is 1800rpm.)

Jointing position

※The followings are just some of jointing forms. ※For more details, contact us.

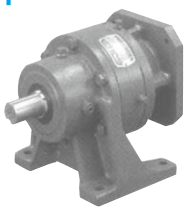

Base jointing horizontal type 1step reducer ※Output shaft horizontal direction

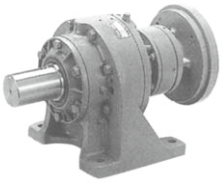

Base jointing horizontal type 2step reducer ※Output shaft horizontal direction

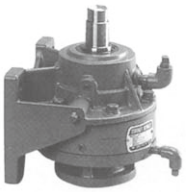

Base jointing handstanding type ※Output shaft upper direction

Flange jointing handstanding type ※Output shaft upper direction

Flange jointing horizontal type ※Output shaft horizontal direction

Independent circlute type gear

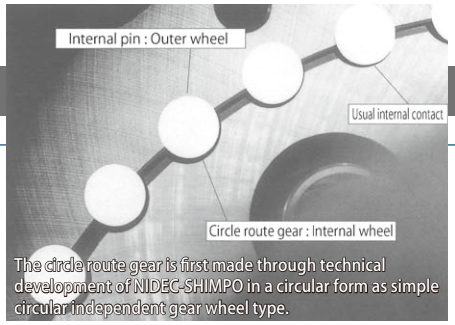

The circle route gear is first made through technical development of NIDEC-SHIMPO in a circular form as simple circular independent gear wheel type.

Completely different from other gear types in terms of life and performance

Long life Gear type having outstanding long life

The circlute type has internal contact structure where one circle' is surrounded by the other 'circle' in a unique form as shown in the figure, so it has larger contact area compared to other gear types of external contact structure. It leads to longer life by extremely low friction consumption due to lower contact pressure(area pressure) even when the same contact pressure is given.

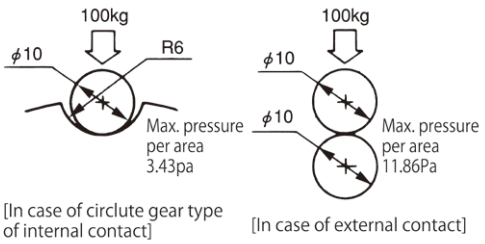

※Life of the wheel of the gear is in inverse proportion to <9 square of area pressure>, theoretically. For example, if area pressure is 1/3, the life is longer up to about 20,000 folds.

In addition, it has contact structure where contact angle is low when in motion, leading to low radial load given to the shaft without excessive load given to the eccentric roller bearing.

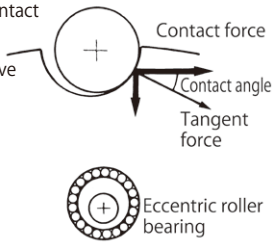

High strength Stable even under overload or impact

Circlute gear types have larger total area centered on the gear compared to involute (newly improved) gear types, and bending stress is not peak in the center of the gear, so it is stable even under overload or impact. Also, the whole gear can maintain precision semi-permanently by using high-strength leaded steel.

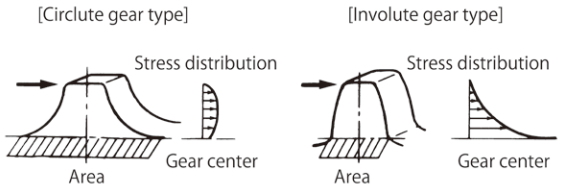

High efficiency Realized high efficiency through high-precision gear type

It has extremely lower area pressure compared to other gear types owing to internal contact of a simple circle with different diameter, facilitating penetration of oils. Such excellent lubrication, low heat generation, and outstanding precision can be a help to display efficiency of the highest level as reducer with ittle noise and vibration.

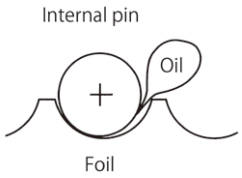

■Model & type symbols

CORONET REDUCER | Servo motor

ER K V - NB - 71 D - ____ - ____ - ____

- ER: Name of CORONET REDUCER
- K: Input side type / K (ERK) : Coupling type (Combination type of each supplier's servo motor)
- V: Jointing mode & output shaft direction
  - ●No symbol : Base-combined horizontal type (horizontal direction to the shaft)
  - ●V : Flange-combined standing type (vertical direction to the shaft)
  - ●I : Flange-combined handstanding type (upper direction to the shaft)
  - ●X : Flange-combined horizontal direction (horizontal direction to the shaft)
  - ●Y : Flange-combined standing type(lower direction to the shaft)
  - ●Z : Base-combined handstanding type(upper direction to the shaft)
  - ●R : Ring mount horizontal type(horizontal direction to the shaft)
  - ●S : Ring mount standing type(lower direction to the shaft)
  - ●T : Ring mount handstanding type(upper direction to the shaft)

  *M type does not include any ring mount.
- NB: Reducer spec. / ●NB : No-backlash spec. ●No symbol : Standard spec.
- 71: Reduction ratio
- D: Reducer type no.
- ____: Applicable servo motor cap.(W)
- ____: Manufacturer name
- ____: Type No.

■ Input part type

●ERK
Coupling Type

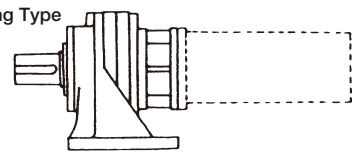

■Jointing types

*The following combination types are available according to the shaft of the servo motor used:

1 If the motor shaft is of key structure

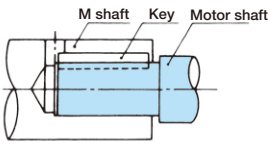

2 If the motor shaft is of taper type

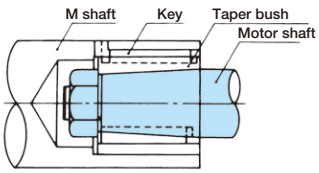

3 If the motor shaft is of straight shaft (clamp disc type)

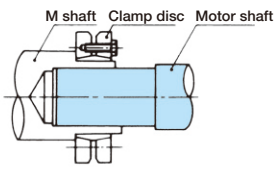

4 If the motor shaft is of straight shaft (direct clamp type)

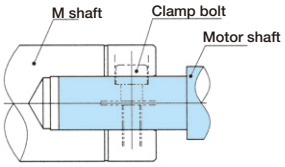

■Type of combination and direction of output shaft

	Horizontal type (output shaft, horizontal)	Standing type (output shaft, downward)	Handstanding type (output shaft, upward)
Base combination	ERK 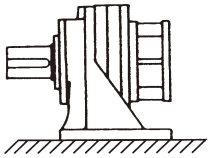	ERK-Y 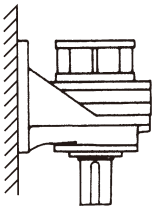	ERK-Z 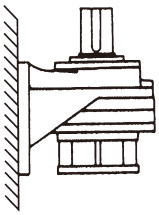
Flange combination	ERK-X 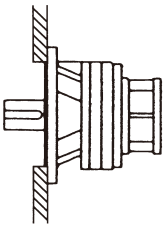	ERK-V 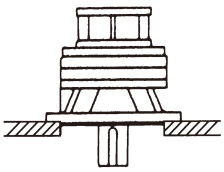	ERK-I 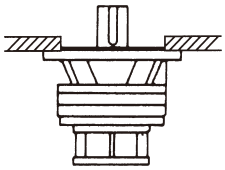
Ring mount	ERK-R 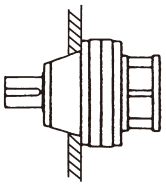	ERK-S 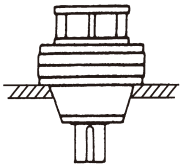	ERK-T 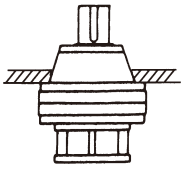

Note) Ring mount not present in M type.

Components and the Functions

● **Circlute gear**
Simple circular independent gear type unique to CORONET REDUCER; internally contacts the external gear with little area pressure and longer life

● **Output shaft**
1step reduction type is in a reverse direction to input shaft rotation direction.

● **Internal pin(external gear)**
More pins than gears of the wheel(internal gear) in the inside of the reducer case(internal) are arranged in the same pitch of high precision same as circlute gear type.

● **Wheel(internal gear)**
"Circlute gear type" assembled in the same pitch of ultra-high precision around the outside of this wheel, it internally contacts the internal pin and goes in gear. The wheel rotates(on its axis) to revolve in the opposite direction to the eccentric motion (revolution). Also, two foils are of <2 foil type> moved to 180° degrees, fully maintaining the balance of strength.

● **Internal(reducer case)**

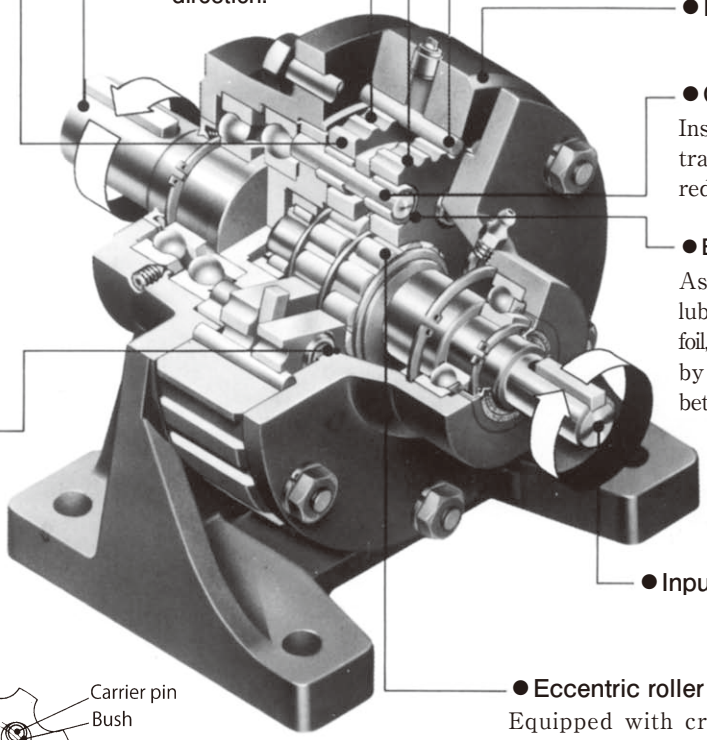

● **Carrier pin**
Inserted into the output shaft, it transmits a rotary motion of the reduced wheel to the output shaft.

● **Bush**
As new technology to increase lubrication of the carrier pin and foil, it minimizes resistance to a slide by reducing diameter difference between pin holes of pin and wheel.

● **Pin hole of Wheel**
The wheel rotates with eccentric motion, and thus the pin hole is arranged in the same pitch of 2-fold magnitude of eccentric diameter on a concentric circle of Ws of the center of the foil as shown in the figure.
The carrier pin arranged on a concentric circle of Os of the center of the output shaft is inserted through the bush and changes eccentric motion into revolution.

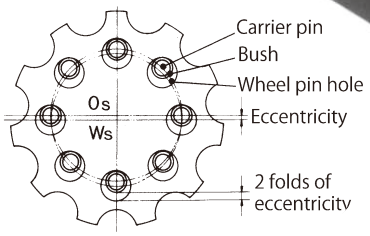

● **Input shaft**

● **Eccentric roller bearing**
Equipped with crank function to change rotation of the input shaft into eccentric motion, it revolves the foil.

Structure drawing (B, C types)

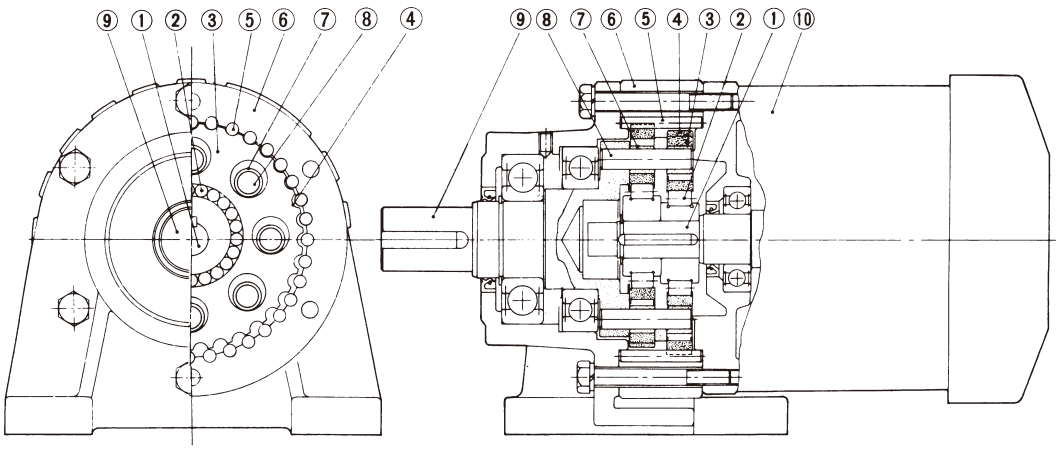

①Input shaft (M shaft)
②Eccentric roller bearing
③Wheel (internal gear)
④Circlute type gear
⑤Internal pin (external gear)
⑥Internal (Reducer case)
⑦Bush
⑧Carrier pin
⑨Output shaft
⑩Mottle

Circlute

Unique reducer using simple circular independent gear type

Different from existing reducers basically, CORONET REDUCER:

Has unique reducer by precisely jointing (1) internal contact planet gear with 1 sheet of gear differential using circlute gear type and (2) internal contact unit through jointing of simple independent gear type

The following figures A~D explain the mechanism of reduction.

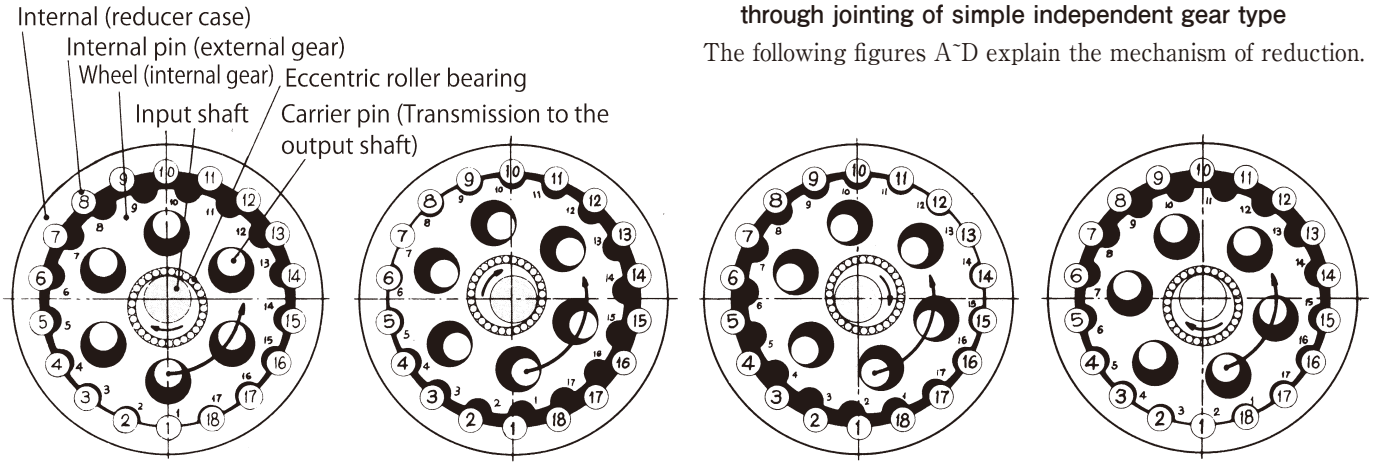

[Figure A] [Figure B] [Figure C] [Figure D]

1. When the input shaft(mottle) rotates once, the eccentric roller bearing interlinked to the input shaft also rotates in the same direction.
2. And, the wheel(internal gear) turning in gear with the eccentric roller bearing eccentrically moves(rotation on its axis), and successively goes in gear with the internal pin(external gear).
   ※Figures A ~ D
3. Like this, once the input shaft rotates once as shown in Figure D, the internal gear goes beyond the starting point(Figure A) as many as the number of gears different from the external gear, and the wheel(internal gear) rotates in the reverse direction to the input shaft. That is, the wheel revolves at high speed on its axis and at the same time rotates at low speed.
4. The reduced rotation(revolution of the foil) is transmitted by the carrier pin and rotates the output shaft.
5. A reduction ratio is arranged in the following equation with the number of gears for the internal pin of the external gear = N, and the number of wheel gears for the internal gear = n:

$$Reductionratio(i) = -\frac{N(Nmber\ of\ external \geq ars) - n(Nmber\ of \cap nal \geq ars)}{n(Nmber\ of \cap nal \geq ars)}$$

In the above table, N=18, n=17, therefore $Reductionratio = -\frac{18-17}{17} = -\frac{1}{17}$.

Explored view (B, C type)

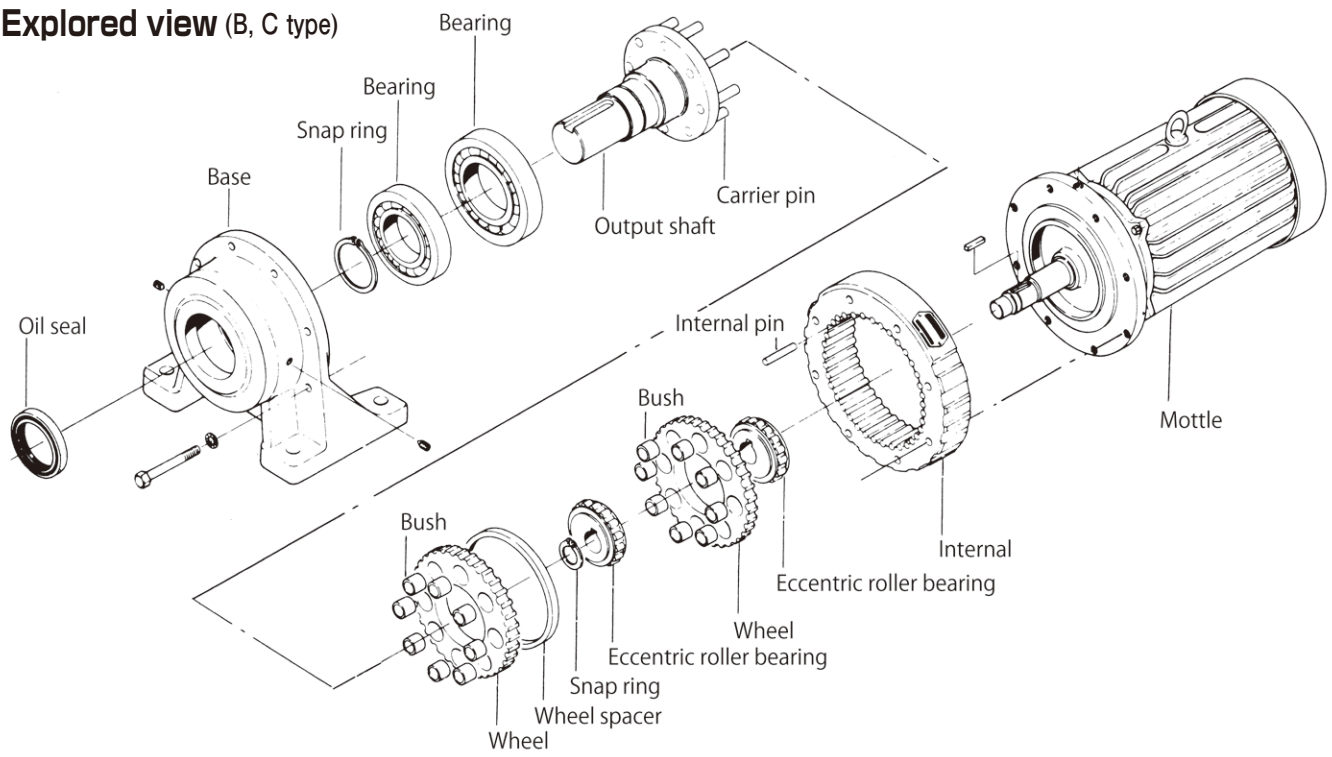

■No-backlash spec.

Note) In general uses, apply the torque in ( ). However, coefficient of utilization is set to 1.2.

Motor cap. (kW) / Reduction ratio	0.2					0.3					0.4					0.6					0.8				
	Type No.	Output torque N·m	Output torque kgf·m	Permissible torque N·m	Permissible torque kgf·m	Type No.	Output torque N·m	Output torque kgf·m	Permissible torque N·m	Permissible torque kgf·m	Type No.	Output torque N·m	Output torque kgf·m	Permissible torque N·m	Permissible torque kgf·m	Type No.	Output torque N·m	Output torque kgf·m	Permissible torque N·m	Permissible torque kgf·m	Type No.	Output torque N·m	Output torque kgf·m	Permissible torque N·m	Permissible torque kgf·m
11	B	17.8	1.82	58.8	6.00	B	26.8	2.73	58.8	6.00	B	35.7	3.64	58.8	6.00	C	53.5	5.46	127	13.0	C	71.4	7.29	127	13.0
17	B	27.6	2.81	80.4	8.20	B	41.4	4.22	80.4	8.20	B	55.2	5.63	80.4	8.20	C	82.8	8.44	186	19.0	C	110	11.3	186	19.0
29	B	47.1	4.80	80.4	8.20	B	(66.9)	(6.83)	80.4	8.20	C	94.1	9.60	186	19.0	C	141	14.4	186	19.0	D	188	19.2	431	44.0
35	B	56.8	5.80	80.4	8.20	C	81.0	8.27	186	19.0	C	114	11.6	186	19.0	C	(155)	(15.8)	186	19.0	D	227	23.1	431	44.0
47	B	(66.9)	(6.83)	80.4	8.20	C	109	11.1	186	19.0	C	153	15.6	186	19.0	D	215	21.9	431	44.0	D	305	31.1	431	44.0
59	C	80.3	8.19	186	19.0	C	137	13.9	186	19.0	D	157	16.0	431	44.0	D	270	27.5	431	44.0	D	(360)	(36.7)	431	44.0
71	C	96.6	9.85	186	19.0	C	(155)	(15.8)	186	19.0	D	189	19.3	431	44.0	D	325	33.1	431	44.0	NE	389	39.7	931	95.0
Manufacturer: Pana																									
Mitsubishi																									
Nikki	NA100-20F-10										NA100-40F-10										NA100-75F-10				
Sanyo																									
Yaskawa						SGMGH-03A □ B61										SGMGH-06A □ B61									

Motor cap. (kW) / Reduction ratio	0.85					0.9					1.2					1.9					2.0				
	Type No.	Output torque N·m	Output torque kgf·m	Permissible torque N·m	Permissible torque kgf·m	Type No.	Output torque N·m	Output torque kgf·m	Permissible torque N·m	Permissible torque kgf·m	Type No.	Output torque N·m	Output torque kgf·m	Permissible torque N·m	Permissible torque kgf·m	Type No.	Output torque N·m	Output torque kgf·m	Permissible torque N·m	Permissible torque kgf·m	Type No.	Output torque N·m	Output torque kgf·m	Permissible torque N·m	Permissible torque kgf·m
11	C	75.9	7.74	127	13.0	C	80.3	8.20	127	13.0	C	(106)	(10.8)	127	13.0	D	170	17.3	284	29.0	D	178	18.2	284	29.0
17	C	117	12.0	186	19.0	C	124	12.7	186	19.0	C	(155)	(15.8)	186	19.0	D	262	26.7	431	44.0	D	276	28.1	431	44.0
29	D	200	20.4	431	44.0	D	212	21.6	431	44.0	D	282	28.8	431	44.0	NE	447	45.6	1190	121	NE	471	48.0	1190	121
35	D	241	24.6	431	44.0	D	256	26.1	431	44.0	D	341	34.8	431	44.0	NE	540	55.1	1340	137	NE	568	58.0	1340	137
47	D	324	33.1	431	44.0	D	343	35.0	431	44.0	NE	437	44.6	1240	127	NE	725	73.9	1240	127	NE	763	77.8	1240	127
59	D	(360)	(36.7)	431	44.0	NE	380	38.7	1140	116	NE	549	56.0	1140	116	NE	910	92.8	1140	116	NE	(948)	(96.7)	1140	116
71	NE	423	43.2	931	95.0	NE	457	46.6	931	95.0	NE	660	67.4	931	95.0	NF	828	84.5	1870	191	NF	896	91.4	1870	191
Manufacturer: Pana																									
Mitsubishi	HC-SFS81K										HC-SFS121K										HC-SFS201K				
Nikki											NA100-110F-10					NA100-180F-10									
Sanyo																									
Yaskawa						SGMGH-06A □ B61					SGMGH-12A □ B61										SGMGH-20A □ B61				

Motor cap. (kW) / Reduction ratio	2.8					3.0					3.7					4.0					5.5				
	Type No.	Output torque N·m	Output torque kgf·m	Permissible torque N·m	Permissible torque kgf·m	Type No.	Output torque N·m	Output torque kgf·m	Permissible torque N·m	Permissible torque kgf·m	Type No.	Output torque N·m	Output torque kgf·m	Permissible torque N·m	Permissible torque kgf·m	Type No.	Output torque N·m	Output torque kgf·m	Permissible torque N·m	Permissible torque kgf·m	Type No.	Output torque N·m	Output torque kgf·m	Permissible torque N·m	Permissible torque kgf·m
11	D	(237)	(24.2)	284	29.0	NE	268	27.3	657	67.0	NE	330	33.7	657	67.0	NE	357	36.4	657	67.0	NE	491	50.1	657	67.0
17	NE	386	39.4	960	98.0	NE	414	42.2	960	98.0	NE	510	52.1	960	98.0	NE	552	56.2	960	98.0	NE	759	77.4	960	98.0
29	NE	659	67.2	1190	121	NE	706	72.0	1190	121	NE	871	88.8	1190	121	NE	941	96.0	1190	121	NF	1290	132	2160	220
35	NE	795	81.1	1340	137	NE	852	86.9	1340	137	NE	1050	107	1340	137	NF	1110	113	2160	220	NF	1560	159	2160	220
47	NE	(1040)	(106)	1240	127	NE	(1040)	(106)	1240	127	NF	1360	138	2160	220	NF	1490	152	2160	220	—	—	—	—	—
59	NF	1200	122	2160	220	NF	1310	133	2160	220	NF	1700	174	2160	220	NF	(1790)	(183)	2160	220	—	—	—	—	—
71	NF	1440	147	1870	191	NF	(1560)	(159)	1870	191	—	—	—	—	—	—	—	—	—	—	—	—	—	—	—
Manufacturer: Pana																									
Mitsubishi						HC-SFS301K																			
Nikki	NA100-270F-10										NA100-370F-10										NA100-550F-10				
Sanyo																									
Yaskawa						SGMGH-30A □ B61										SGMGH-40A □ B61					SGMGH-55A □ B61				

Motor cap. (kW) / Reduction ratio	7.5				
	Type No.	Output torque N·m	Output torque kgf·m	Permissible torque N·m	Permissible torque kgf·m
11	NF	669	68.3	1090	111
17	NF	1030	106	1570	160
29	NF	1770	180	2160	220
35	—	—	—	—	—
47	—	—	—	—	—
59	—	—	—	—	—
71	—	—	—	—	—
Manufacturer: Pana					
Mitsubishi					
Nikki	NA100-750F-10				
Sanyo					
Yaskawa					

Pana: Panasonic

■ Standard spec.

Note) In general uses, apply the torque in ( ). However, coefficient of utilization is set to 1.2.

Reduction ratio \ Motor cap. (kW)	0.2					0.3					0.4					0.6					0.8				
	Type No.	Output torque N·m	Output torque kgf·m	Permissible torque N·m	Permissible torque kgf·m	Type No.	Output torque N·m	Output torque kgf·m	Permissible torque N·m	Permissible torque kgf·m	Type No.	Output torque N·m	Output torque kgf·m	Permissible torque N·m	Permissible torque kgf·m	Type No.	Output torque N·m	Output torque kgf·m	Permissible torque N·m	Permissible torque kgf·m	Type No.	Output torque N·m	Output torque kgf·m	Permissible torque N·m	Permissible torque kgf·m
11	A	18.8	1.92	49.0	5.00	A	28.3	2.89	49.0	5.00	A	37.8	3.86	49.0	5.00	B	56.7	5.79	108	11.0	B	75.6	7.71	108	11.0
17	A	29.1	2.97	53.9	5.50	A	43.8	4.47	53.9	5.50	B	58.4	5.96	147	15.0	B	87.6	8.94	147	15.0	B	117	11.9	147	15.0
29	A	49.7	5.07	61.7	6.30	B	74.8	7.63	147	15.0	B	100	10.2	147	15.0	C	150	15.3	343	35.0	C	199	20.3	343	35.0
35	A	(57.1)	(5.83)	68.6	7.00	B	90.2	9.20	147	15.0	B	121	12.3	147	15.0	C	180	18.4	343	35.0	C	240	24.5	343	35.0
47	B	78.7	8.03	147	15.0	B	122	12.4	147	15.0	C	158	16.1	343	35.0	C	242	24.7	343	35.0	C	(286)	(29.2)	343	35.0
59	B	99.0	10.1	147	15.0	C	141	14.4	343	35.0	C	198	20.2	343	35.0	C	(286)	(29.2)	343	35.0	D	393	40.1	784	80.0
71	C	102	10.4	343	35.0	C	170	17.3	343	35.0	C	238	24.3	343	35.0	D	337	34.4	784	80.0	D	472	48.2	784	80.0
Manufacturer: Pana																									
Mitsubishi																									
Nikki	NA100-20F-10										NA100-40F-10										NA100-75F-10				
Sanyo																									
Yaskawa						SGMGH-03A □ B61										SGMGH-06A □ B61									

Reduction ratio \ Motor cap. (kW)	0.85					0.9					1.2					1.9					2.0				
	Type No.	Output torque N·m	Output torque kgf·m	Permissible torque N·m	Permissible torque kgf·m	Type No.	Output torque N·m	Output torque kgf·m	Permissible torque N·m	Permissible torque kgf·m	Type No.	Output torque N·m	Output torque kgf·m	Permissible torque N·m	Permissible torque kgf·m	Type No.	Output torque N·m	Output torque kgf·m	Permissible torque N·m	Permissible torque kgf·m	Type No.	Output torque N·m	Output torque kgf·m	Permissible torque N·m	Permissible torque kgf·m
11	B	80.4	8.20	108	11.0	B	85.1	8.68	108	11.0	C	114	11.6	245	25.0	C	179	18.3	245	25.0	C	189	19.3	245	25.0
17	B	(123)	(12.5)	147	15.0	B	(123)	(12.5)	147	15.0	C	175	17.9	343	35.0	C	277	28.3	343	35.0	C	(286)	(29.2)	343	35.0
29	C	212	21.6	343	35.0	C	224	22.9	343	35.0	C	(286)	(29.2)	343	35.0	D	473	48.3	784	80.0	D	498	50.8	784	80.0
35	C	256	26.1	343	35.0	C	270	27.6	343	35.0	D	361	36.8	784	80.0	D	571	58.3	784	80.0	D	602	61.4	784	80.0
47	D	335	34.2	784	80.0	D	358	36.5	784	80.0	D	484	49.4	784	80.0	NE	767	78.3	2260	231	NE	808	82.4	2260	231
59	D	421	43.0	784	80.0	D	449	45.8	784	80.0	D	609	62.1	784	80.0	NE	963	98.3	2080	212	NE	1010	103	2080	212
71	D	507	51.7	784	80.0	D	540	55.1	784	80.0	D	(654)	(66.7)	784	80.0	NE	1160	118	1710	174	NE	1220	124	1710	174
Manufacturer: Pana																									
Mitsubishi	HC-SFS81K										HC-SFS121K										HC-SFS201K				
Nikki											NA100-110F-10					NA100-180F-10									
Sanyo																									
Yaskawa						SGMGH-06A □ B61					SGMGH-12A □ B61										SGMGH-20A □ B61				

Reduction ratio \ Motor cap. (kW)	2.8					3.0					3.7					4.0					5.5				
	Type No.	Output torque N·m	Output torque kgf·m	Permissible torque N·m	Permissible torque kgf·m	Type No.	Output torque N·m	Output torque kgf·m	Permissible torque N·m	Permissible torque kgf·m	Type No.	Output torque N·m	Output torque kgf·m	Permissible torque N·m	Permissible torque kgf·m	Type No.	Output torque N·m	Output torque kgf·m	Permissible torque N·m	Permissible torque kgf·m	Type No.	Output torque N·m	Output torque kgf·m	Permissible torque N·m	Permissible torque kgf·m
11	D	265	27.0	529	54.0	D	283	28.9	529	54.0	D	350	35.7	529	54.0	D	378	38.5	529	54.0	NE	519	53.0	1210	123
17	D	409	41.7	784	80.0	D	438	44.7	784	80.0	D	540	55.1	784	80.0	D	584	59.6	784	80.0	NE	804	82.0	1750	179
29	D	(654)	(66.7)	784	80.0	NE	748	76.3	2170	221	NE	922	94.1	2170	221	NE	997	101	2170	221	NE	1370	140	2170	221
35	NE	842	85.9	2450	250	NE	902	92.0	2450	250	NE	1120	114	2450	250	NE	1200	122	2450	250	NE	1660	169	2450	250
47	NE	1130	115	2260	231	NE	1220	124	2260	231	NE	1490	152	2260	231	NE	1620	164	2260	231	NF	2220	227	3920	400
59	NE	1420	145	2080	212	NE	1520	155	2080	212	NE	(1730)	(177)	2080	212	NF	2020	206	3920	400	NF	2780	284	3920	400
71	NF	1620	165	3420	349	NF	1750	179	3420	349	NF	2220	227	3420	349	NF	2430	248	3420	349	—	—	—	—	—
Manufacturer: Pana																									
Mitsubishi						HC-SFS301K																			
Nikki	NA100-270F-10										NA100-370F-10										NA100-550F-10				
Sanyo																									
Yaskawa						SGMGH-30A □ B61										SGMGH-40A □ B61					SGMGH-55A □ B61				

Reduction ratio \ Motor cap. (kW)	7.5					11.0				
	Type No.	Output torque N·m	Output torque kgf·m	Permissible torque N·m	Permissible torque kgf·m	Type No.	Output torque N·m	Output torque kgf·m	Permissible torque N·m	Permissible torque kgf·m
11	NE	709	72.3	1210	123	NE	(1010)	(103)	1210	123
17	NE	1100	112	1750	179	NF	1610	164	2850	291
29	NE	(1800)	(184)	2170	221	NF	2740	280	3920	400
35	NE	(2040)	(208)	2450	250	NF	(3260)	(333)	3920	400
47	NF	3030	309	3920	400	—	—	—	—	—
59	—	—	—	—	—	—	—	—	—	—
71	—	—	—	—	—	—	—	—	—	—
Manufacturer: Pana										
Mitsubishi										
Nikki	NA100-750F-10					NA100-1100F-10				
Sanyo										
Yaskawa										

Pana: Panasonic

Performance Tables

<Input speed 1500rpm>

■No-backlash spec.

Note) In general uses, apply the torque in ( ). However, coefficient of utilization is set to 1.2.

Motor cap. (kW) / Reduction ratio	0.15					0.2					0.3					0.4					0.45				
	Type No.	Output torque N·m	Output torque kgf·m	Permissible torque N·m	Permissible torque kgf·m	Type No.	Output torque N·m	Output torque kgf·m	Permissible torque N·m	Permissible torque kgf·m	Type No.	Output torque N·m	Output torque kgf·m	Permissible torque N·m	Permissible torque kgf·m	Type No.	Output torque N·m	Output torque kgf·m	Permissible torque N·m	Permissible torque kgf·m	Type No.	Output torque N·m	Output torque kgf·m	Permissible torque N·m	Permissible torque kgf·m
11	M	(3.23)	(0.33)	3.92	0.40	B	10.0	1.02	58.8	6.00	B	17.0	1.74	58.8	6.00	B	23.8	2.43	58.8	6.00	B	26.8	2.73	58.8	6.00
17	M	(5.10)	(0.52)	6.08	0.62	B	15.5	1.58	80.4	8.20	B	26.3	2.68	80.4	8.20	B	36.8	3.75	80.4	8.20	B	41.4	4.22	80.4	8.20
29	M	(5.19)	(0.53)	6.27	0.64	B	26.4	2.69	80.4	8.20	B	44.8	4.58	80.4	8.20	B	62.7	6.40	80.4	8.20	B	(66.9)	(6.83)	80.4	8.20
35	M	(5.39)	(0.55)	6.47	0.66	B	31.9	3.25	80.4	8.20	B	54.1	5.52	80.4	8.20	B	(66.9)	(6.83)	80.4	8.20	C	76.2	7.78	186	19.0
47	M	(5.39)	(0.55)	6.47	0.66	B	42.8	4.36	80.4	8.20	B	(66.9)	(6.83)	80.4	8.20	C	87.4	8.92	186	19.0	C	102	10.4	186	19.0
59	M	(5.39)	(0.55)	6.47	0.66	B	53.7	5.48	75.5	7.70	C	72.2	7.36	176	18.0	C	110	11.2	176	18.0	C	128	13.1	176	18.0
71	M	(5.39)	(0.55)	6.47	0.66	C	41.7	4.25	167	17.0	C	86.8	8.86	167	17.0	C	132	13.5	167	17.0	C	(139)	(14.2)	167	17.0
Manufacturer: Pana																									
Mitsubishi																									
Nikki						NA30-13F-15										NA30-25F-15									
Sanyo																									
Yaskawa																					SGMGH-05 □□ A61				

Motor cap. (kW) / Reduction ratio	0.75					0.8					0.85					1.0					1.3				
	Type No.	Output torque N·m	Output torque kgf·m	Permissible torque N·m	Permissible torque kgf·m	Type No.	Output torque N·m	Output torque kgf·m	Permissible torque N·m	Permissible torque kgf·m	Type No.	Output torque N·m	Output torque kgf·m	Permissible torque N·m	Permissible torque kgf·m	Type No.	Output torque N·m	Output torque kgf·m	Permissible torque N·m	Permissible torque kgf·m	Type No.	Output torque N·m	Output torque kgf·m	Permissible torque N·m	Permissible torque kgf·m
11	B	44.6	4.55	58.8	6.00	B	47.6	4.86	58.8	6.00	B	(49.0)	(5.00)	58.8	6.00	C	59.5	6.07	127	13.0	C	77.3	7.89	127	13.0
17	B	(66.9)	(6.83)	80.4	8.20	C	73.6	7.51	186	19.0	C	78.2	7.98	186	19.0	C	92.0	9.38	186	19.0	C	120	12.2	186	19.0
29	C	118	12.0	186	19.0	C	125	12.8	186	19.0	C	133	13.6	186	19.0	C	(155)	(15.8)	186	19.0	D	198	20.2	431	44.0
35	C	142	14.5	186	19.0	C	151	15.5	186	19.0	C	(155)	(15.8)	186	19.0	D	173	17.6	431	44.0	D	239	24.4	431	44.0
47	D	157	16.0	431	44.0	D	172	17.6	431	44.0	D	187	19.1	431	44.0	D	232	23.7	431	44.0	D	322	32.8	431	44.0
59	D	197	20.1	421	43.0	D	216	22.0	421	43.0	D	235	24.0	421	43.0	D	291	29.7	421	43.0	D	(351)	(35.8)	421	43.0
71	D	237	24.2	402	41.0	D	260	26.5	402	41.0	D	282	28.8	402	41.0	D	(335)	(34.2)	402	41.0	NE	379	38.6	823	84.0
Manufacturer: Pana																									
Mitsubishi																									
Nikki						NA30-50F-15																			
Sanyo																									
Yaskawa											SGMGH-09 □□ A61										SGMGH-13 □□ A61				

Motor cap. (kW) / Reduction ratio	1.5					1.6					1.8					2.0					2.2				
	Type No.	Output torque N·m	Output torque kgf·m	Permissible torque N·m	Permissible torque kgf·m	Type No.	Output torque N·m	Output torque kgf·m	Permissible torque N·m	Permissible torque kgf·m	Type No.	Output torque N·m	Output torque kgf·m	Permissible torque N·m	Permissible torque kgf·m	Type No.	Output torque N·m	Output torque kgf·m	Permissible torque N·m	Permissible torque kgf·m	Type No.	Output torque N·m	Output torque kgf·m	Permissible torque N·m	Permissible torque kgf·m
11	C	89.2	9.11	127	13.0	C	95.2	9.71	127	13.0	C	(106)	(10.8)	127	13.0	D	119	12.1	255	26.0	D	131	13.4	255	26.0
17	C	138	14.1	186	19.0	C	147	15.0	186	19.0	C	(155)	(15.8)	186	19.0	D	184	18.8	392	40.0	D	202	20.6	392	40.0
29	D	235	24.0	431	44.0	D	251	25.6	431	44.0	D	282	28.8	431	44.0	D	314	32.0	431	44.0	D	345	35.2	431	44.0
35	D	284	29.0	431	44.0	D	303	30.9	431	44.0	D	341	34.8	431	44.0	D	(360)	(36.7)	431	44.0	NE	387	39.5	1210	123
47	D	(360)	(36.7)	431	44.0	D	(360)	(36.7)	431	44.0	NE	400	40.8	1110	113	NE	460	46.9	1110	113	NE	520	53.0	1110	113
59	NE	390	39.8	1020	104	NE	427	43.6	1020	104	NE	502	51.3	1020	104	NE	577	58.9	1020	104	NE	653	66.6	1020	104
71	NE	469	47.9	823	84.0	NE	514	52.5	823	84.0	NE	605	61.7	823	84.0	NE	(686)	(70.0)	823	84.0	NE	(686)	(70.0)	823	84.0
Manufacturer: Pana																									
Mitsubishi																									
Nikki						NA30-110F-15																			
Sanyo																									
Yaskawa											SGMGH-20 □□ A61														

Motor cap. (kW) / Reduction ratio	2.8					2.9					3.0					3.7					4.4				
	Type No.	Output torque N·m	Output torque kgf·m	Permissible torque N·m	Permissible torque kgf·m	Type No.	Output torque N·m	Output torque kgf·m	Permissible torque N·m	Permissible torque kgf·m	Type No.	Output torque N·m	Output torque kgf·m	Permissible torque N·m	Permissible torque kgf·m	Type No.	Output torque N·m	Output torque kgf·m	Permissible torque N·m	Permissible torque kgf·m	Type No.	Output torque N·m	Output torque kgf·m	Permissible torque N·m	Permissible torque kgf·m
11	D	167	17.0	255	26.0	D	173	17.6	255	26.0	D	178	18.2	255	26.0	D	(213)	(21.7)	255	26.0	NE	262	26.7	578	59.0
17	D	257	26.3	392	40.0	D	267	27.2	392	40.0	D	276	28.1	392	40.0	D	(326)	(33.3)	392	40.0	NE	405	41.3	853	87.0
29	NE	431	44.0	1050	107	NE	450	45.9	1050	107	NE	468	47.8	1050	107	NE	580	59.2	1050	107	NE	690	70.4	1050	107
35	NE	521	53.1	1210	123	NE	543	55.4	1210	123	NE	565	57.7	1210	123	NE	700	71.5	1210	123	NE	833	85.0	1210	123
47	NE	699	71.4	1110	113	NE	729	74.4	1110	113	NE	759	77.5	1110	113	NE	(923)	(94.2)	1110	113	NF	846	86.3	2160	220
59	NE	(850)	(86.7)	1020	104	NE	(850)	(86.7)	1020	104	NE	(850)	(86.7)	1020	104	NF	799	81.6	1020	208	NF	1060	108	2040	208
71	NF	555	56.7	1680	171	NF	601	61.3	1680	171	NF	646	65.9	1680	171	NF	962	98.2	1680	171	NF	1280	130	1680	171
Manufacturer: Pana																									
Mitsubishi																									
Nikki		NA30-180F-15																							
Sanyo																									
Yaskawa						SGMGH-30 □□ A61															SGMGH-44 □□ A61				

Motor cap. (kW) / Reduction ratio	5.5					7.5					11.0				
	Type No.	Output torque N·m	Output torque kgf·m	Permissible torque N·m	Permissible torque kgf·m	Type No.	Output torque N·m	Output torque kgf·m	Permissible torque N·m	Permissible torque kgf·m	Type No.	Output torque N·m	Output torque kgf·m	Permissible torque N·m	Permissible torque kgf·m
11	NE	327	33.4	578	59.0	NE	446	45.5	578	59.0	NF	654	66.8	970	99.0
17	NE	506	51.6	853	87.0	NE	690	70.4	853	87.0	NF	1010	103	1380	141
29	NE	863	88.0	1050	107	NF	1100	112	2100	214	NF	1730	176	2100	214
35	NE	(1010)	(103)	1210	123	NF	1320	135	2160	220	NF	(1790)	(183)	2160	220
47	NF	1180	120	2160	220	NF	1770	181	2160	220	—	—	—	—	—
59	NF	1480	151	2040	208	—	—	—	—	—	—	—	—	—	—
71	—	—	—	—	—	—	—	—	—	—	—	—	—	—	—
Manufacturer: Pana															
Mitsubishi															
Nikki															
Sanyo															
Yaskawa	SGMGH-55 □□ A61					SGMGH-75 □□ A61					SGMGH-1A □□ A61				

Pana : Panasonic

Note : The combination of servo motor and reducer in the Performance Tables is based on rated torque of the servo motor. In case of sharp acceleration/deceleration, it may impair the reducer life, so see [Selection Procedure] on the EF41 page.

■ Standard spec.

Note) In general uses, apply the torque in ( ). However, coefficient of utilization is set to 1.2.

Motor cap. (kW) / Reduction ratio	0.15					0.2					0.3					0.4					0.45				
	Type No.	Output torque N·m	Output torque kgf·m	Permissible torque N·m	Permissible torque kgf·m	Type No.	Output torque N·m	Output torque kgf·m	Permissible torque N·m	Permissible torque kgf·m	Type No.	Output torque N·m	Output torque kgf·m	Permissible torque N·m	Permissible torque kgf·m	Type No.	Output torque N·m	Output torque kgf·m	Permissible torque N·m	Permissible torque kgf·m	Type No.	Output torque N·m	Output torque kgf·m	Permissible torque N·m	Permissible torque kgf·m
11	M	(6.08)	(0.62)	7.25	0.74	A	11.4	1.16	47.0	4.80	A	18.4	1.88	47.0	4.80	A	25.2	2.57	47.0	4.80	A	28.3	2.89	47.0	4.80
17	M	(9.02)	(0.92)	10.8	1.10	A	17.6	1.80	48.0	4.90	A	28.4	2.90	48.0	4.90	A	38.9	3.97	48.0	4.90	A	(40.0)	(4.08)	48.0	4.90
29	A	20.9	2.13	54.9	5.60	A	30.1	3.07	54.9	5.60	A	(45.8)	(4.67)	54.9	5.60	B	65.9	6.72	147	15.0	B	74.8	7.63	147	15.0
35	A	25.2	2.57	59.8	6.10	A	36.4	3.71	59.8	6.10	A	(49.8)	(5.08)	59.8	6.10	B	79.5	8.11	147	15.0	B	90.2	9.20	147	15.0
47	A	33.8	3.45	53.9	5.50	A	(44.9)	(4.58)	53.9	5.50	B	76.8	7.84	147	15.0	B	107	10.9	147	15.0	B	122	12.4	147	15.0
59	A	42.4	4.33	51.0	5.20	B	58.9	6.01	137	14.0	B	96.4	9.84	137	14.0	B	(115)	(11.7)	137	14.0	C	134	13.7	333	34.0
71	A	(33.5)	(3.42)	40.2	4.10	B	70.9	7.23	108	11.0	C	93.8	9.57	304	31.0	C	139	14.2	304	31.0	C	162	16.5	304	31.0
Manufacturer: Pana																									
Manufacturer: Mitsubishi																									
Manufacturer: Nikki						NA30-13F-15										NA30-25F-15									
Manufacturer: Sanyo																									
Manufacturer: Yaskawa																					SGMGH-05 □□ A61				

Motor cap. (kW) / Reduction ratio	0.75					0.8					0.85					1.0					1.3				
	Type No.	Output torque N·m	Output torque kgf·m	Permissible torque N·m	Permissible torque kgf·m	Type No.	Output torque N·m	Output torque kgf·m	Permissible torque N·m	Permissible torque kgf·m	Type No.	Output torque N·m	Output torque kgf·m	Permissible torque N·m	Permissible torque kgf·m	Type No.	Output torque N·m	Output torque kgf·m	Permissible torque N·m	Permissible torque kgf·m	Type No.	Output torque N·m	Output torque kgf·m	Permissible torque N·m	Permissible torque kgf·m
11	B	47.2	4.82	108	11.0	B	50.4	5.14	108	11.0	B	53.5	5.46	108	11.0	B	63.0	6.43	108	11.0	B	81.9	8.36	108	11.0
17	B	73.0	7.45	147	15.0	B	77.9	7.95	147	15.0	B	82.7	8.44	147	15.0	B	97.3	9.93	147	15.0	B	(123)	(12.5)	147	15.0
29	B	(123)	(12.5)	147	15.0	B	(123)	(12.5)	147	15.0	C	140	14.3	343	35.0	C	166	16.9	343	35.0	C	216	22.0	343	35.0
35	C	146	14.9	343	35.0	C	158	16.1	343	35.0	C	169	17.2	343	35.0	C	201	20.5	343	35.0	C	261	26.6	343	35.0
47	C	197	20.1	343	35.0	C	212	21.6	343	35.0	C	226	23.1	343	35.0	C	270	27.5	343	35.0	D	332	33.8	784	80.0
59	C	247	25.2	333	34.0	C	266	27.1	333	34.0	C	(277)	(28.3)	333	34.0	D	304	31.0	774	79.0	D	416	42.5	774	79.0
71	C	(253)	(25.8)	304	31.0	D	275	28.1	735	75.0	D	298	30.4	735	75.0	D	366	37.3	735	75.0	D	501	51.1	735	75.0
Manufacturer: Pana																									
Manufacturer: Mitsubishi																									
Manufacturer: Nikki						NA30-50F-15																			
Manufacturer: Sanyo																									
Manufacturer: Yaskawa											SGMGH-09 □□ A61										SGMGH-13 □□ A61				

Motor cap. (kW) / Reduction ratio	1.5					1.6					1.8					2.0					2.2				
	Type No.	Output torque N·m	Output torque kgf·m	Permissible torque N·m	Permissible torque kgf·m	Type No.	Output torque N·m	Output torque kgf·m	Permissible torque N·m	Permissible torque kgf·m	Type No.	Output torque N·m	Output torque kgf·m	Permissible torque N·m	Permissible torque kgf·m	Type No.	Output torque N·m	Output torque kgf·m	Permissible torque N·m	Permissible torque kgf·m	Type No.	Output torque N·m	Output torque kgf·m	Permissible torque N·m	Permissible torque kgf·m
11	B	(89.9)	(9.17)	108	11.0	C	101	10.3	245	25.0	C	114	11.6	245	25.0	C	126	12.9	245	25.0	C	138	14.1	245	25.0
17	C	146	14.9	343	35.0	C	156	15.9	343	35.0	C	175	17.9	343	35.0	C	195	19.9	343	35.0	C	215	21.9	343	35.0
29	C	249	25.4	343	35.0	C	266	27.1	343	35.0	C	(286)	(29.2)	343	35.0	D	332	33.9	784	80.0	D	366	37.3	784	80.0
35	C	(286)	(29.2)	343	35.0	C	(286)	(29.2)	343	35.0	D	359	36.6	784	80.0	D	401	40.9	784	80.0	D	441	45.0	784	80.0
47	D	392	40.0	784	80.0	D	421	43.0	784	80.0	D	481	49.1	784	80.0	D	538	54.9	784	80.0	D	592	60.4	784	80.0
59	D	492	50.2	774	79.0	D	529	54.0	774	79.0	D	604	61.6	774	79.0	D	(645)	(65.8)	774	79.0	D	(645)	(65.8)	774	79.0
71	D	592	60.4	735	75.0	D	(613)	(62.5)	735	75.0	D	(613)	(62.5)	735	75.0	NE	715	73.0	1500	153	NE	807	82.3	1500	153
Manufacturer: Pana																									
Manufacturer: Mitsubishi																									
Manufacturer: Nikki						NA30-110F-15																			
Manufacturer: Sanyo																									
Manufacturer: Yaskawa											SGMGH-20 □□ A61														

Motor cap. (kW) / Reduction ratio	2.8					2.9					3.0					3.7					4.4				
	Type No.	Output torque N·m	Output torque kgf·m	Permissible torque N·m	Permissible torque kgf·m	Type No.	Output torque N·m	Output torque kgf·m	Permissible torque N·m	Permissible torque kgf·m	Type No.	Output torque N·m	Output torque kgf·m	Permissible torque N·m	Permissible torque kgf·m	Type No.	Output torque N·m	Output torque kgf·m	Permissible torque N·m	Permissible torque kgf·m	Type No.	Output torque N·m	Output torque kgf·m	Permissible torque N·m	Permissible torque kgf·m
11	C	176	18.0	245	25.0	C	182	18.6	245	25.0	C	189	19.3	245	25.0	D	233	23.8	470	48.0	D	277	28.3	470	48.0
17	C	272	27.8	343	35.0	C	282	28.8	343	35.0	C	(286)	(29.2)	343	35.0	D	361	36.8	725	74.0	D	428	43.7	725	74.0
29	D	466	47.5	784	80.0	D	482	49.1	784	80.0	D	498	50.8	784	80.0	D	614	62.7	784	80.0	NE	731	74.6	1910	195
35	D	562	57.3	784	80.0	D	581	59.3	784	80.0	D	602	61.4	784	80.0	D	(654)	(66.7)	784	80.0	NE	882	90.0	2210	225
47	D	(654)	(66.7)	784	80.0	NE	743	75.8	2020	206	NE	773	78.9	2020	206	NE	980	100	2020	206	NE	1190	121	2020	206
59	NE	895	91.3	1860	190	NE	933	95.2	1860	190	NE	970	99.0	1860	190	NE	1230	126	1860	190	NE	1490	152	1860	190
71	NE	1080	110	1500	153	NE	1130	115	1500	153	NE	1170	119	1500	153	NE	(1250)	(128)	1500	153	NF	1560	159	3050	311
Manufacturer: Pana																									
Manufacturer: Mitsubishi																									
Manufacturer: Nikki		NA30-180F-15																							
Manufacturer: Sanyo																									
Manufacturer: Yaskawa						SGMGH-30 □□ A61															SGMGH-44 □□ A61				

Motor cap. (kW) / Reduction ratio	5.5					7.5					11.0					15.0				
	Type No.	Output torque N·m	Output torque kgf·m	Permissible torque N·m	Permissible torque kgf·m	Type No.	Output torque N·m	Output torque kgf·m	Permissible torque N·m	Permissible torque kgf·m	Type No.	Output torque N·m	Output torque kgf·m	Permissible torque N·m	Permissible torque kgf·m	Type No.	Output torque N·m	Output torque kgf·m	Permissible torque N·m	Permissible torque kgf·m
11	D	347	35.4	470	48.0	NE	472	48.2	1070	109	NE	693	70.7	1070	109	NE	(890)	(90.8)	1070	109
17	D	535	54.6	725	74.0	NE	730	74.5	1560	159	NE	1070	109	1560	159	NF	1460	149	2520	257
29	NE	913	93.2	1910	195	NE	1240	127	1910	195	NF	1820	186	3820	390	NF	2490	254	3820	390
35	NE	1110	113	2210	225	NE	1500	153	2210	225	NF	2210	225	3920	400	NF	3010	307	3920	400
47	NE	1480	151	2020	206	NF	1960	200	3920	400	NF	2960	302	3920	400	—	—	—	—	—
59	NF	1710	174	3710	379	NF	2460	251	3710	379	—	—	—	—	—	—	—	—	—	—
71	NF	2060	210	3050	311	NF	(2540)	(259)	3050	311	—	—	—	—	—	—	—	—	—	—
Manufacturer: Pana																				
Manufacturer: Mitsubishi																				
Manufacturer: Nikki																				
Manufacturer: Sanyo																				
Manufacturer: Yaskawa	SGMGH-55 □□ A61					SGMGH-75 □□ A61					SGMGH-1A □□ A61					SGMGH-1E □□ A61				

Pana : Panasonic

Performance Tables

<Input speed 2000rpm>

■No-backlash spec.

Note) In general uses, apply the torque in ( ). However, coefficient of utilization is set to 1.2.

Motor cap. (kW) / Reduction ratio	0.1					0.2					0.4					0.5					0.75				
	Type No.	Output torque N·m	Output torque kgf·m	Permissible torque N·m	Permissible torque kgf·m	Type No.	Output torque N·m	Output torque kgf·m	Permissible torque N·m	Permissible torque kgf·m	Type No.	Output torque N·m	Output torque kgf·m	Permissible torque N·m	Permissible torque kgf·m	Type No.	Output torque N·m	Output torque kgf·m	Permissible torque N·m	Permissible torque kgf·m	Type No.	Output torque N·m	Output torque kgf·m	Permissible torque N·m	Permissible torque kgf·m
11	M	(2.94)	(0.30)	3.53	0.36	B	6.08	0.62	52.9	5.40	B	16.6	1.69	52.9	5.40	B	21.8	2.23	52.9	5.40	B	33.5	3.42	52.9	5.40
17	M	(4.61)	(0.47)	5.49	0.56	B	9.40	0.96	72.3	7.38	B	25.6	2.61	72.3	7.38	B	33.7	3.44	72.3	7.38	B	51.7	5.28	72.3	7.38
29	M	(4.70)	(0.48)	5.68	0.58	B	16.0	1.64	72.3	7.38	B	43.7	4.46	72.3	7.38	B	57.6	5.87	72.3	7.38	C	79.9	8.16	168	17.1
35	M	(4.80)	(0.49)	5.78	0.59	B	19.3	1.97	72.3	7.38	B	52.8	5.38	72.3	7.38	B	(60.3)	(6.15)	72.3	7.38	C	96.5	9.84	168	17.1
47	M	(4.80)	(0.49)	5.78	0.59	B	26.0	2.65	72.3	7.38	B	(60.3)	(6.15)	72.3	7.38	C	73.5	7.50	168	17.1	C	130	13.2	168	17.1
59	M	(4.80)	(0.49)	5.78	0.59	B	32.6	3.33	67.9	6.93	C	64.1	6.54	159	16.2	C	92.2	9.41	159	16.2	C	(132)	(13.5)	159	16.2
71	M	(4.80)	(0.49)	5.78	0.59	B	39.2	4.00	52.9	5.40	C	77.1	7.87	150	15.3	C	111	11.3	150	15.3	D	132	13.4	362	36.9
Manufacturer: Pana																					MDMA082				
Mitsubishi																HC-SFS52K									
Nikki																									
Sanyo																P60B13050									
Yaskawa																									

Motor cap. (kW) / Reduction ratio	0.8					1.0					1.2					1.5					1.6				
	Type No.	Output torque N·m	Output torque kgf·m	Permissible torque N·m	Permissible torque kgf·m	Type No.	Output torque N·m	Output torque kgf·m	Permissible torque N·m	Permissible torque kgf·m	Type No.	Output torque N·m	Output torque kgf·m	Permissible torque N·m	Permissible torque kgf·m	Type No.	Output torque N·m	Output torque kgf·m	Permissible torque N·m	Permissible torque kgf·m	Type No.	Output torque N·m	Output torque kgf·m	Permissible torque N·m	Permissible torque kgf·m
11	B	35.7	3.64	52.9	5.40	B	(44.1)	(4.50)	52.9	5.40	C	53.5	5.46	115	11.7	C	66.9	6.83	115	11.7	C	71.4	7.29	115	11.7
17	B	55.2	5.63	72.3	7.38	C	67.1	6.85	168	17.1	C	82.8	8.44	168	17.1	C	103	10.6	168	17.1	C	110	11.3	168	17.1
29	C	86.9	8.86	168	17.1	C	115	11.7	168	17.1	C	(140)	(14.3)	168	17.1	D	158	16.1	388	39.6	D	171	17.5	388	39.6
35	C	105	10.7	168	17.1	C	138	14.1	168	17.1	D	140	14.3	388	39.6	D	190	19.4	388	39.6	D	207	21.1	388	39.6
47	C	(140)	(14.3)	168	17.1	D	143	14.6	388	39.6	D	188	19.2	388	39.6	D	255	26.1	388	39.6	D	278	28.4	388	39.6
59	D	124	12.6	379	38.7	D	180	18.3	379	38.7	D	236	24.1	379	38.7	D	(317)	(32.3)	379	38.7	D	(317)	(32.3)	379	38.7
71	D	149	15.2	362	36.9	D	216	22.1	362	36.9	D	284	29.0	362	36.9	NE	230	23.5	741	75.6	NE	264	26.9	741	75.6
Manufacturer: Pana						MDMA102										MDMA152									
Mitsubishi						HC-SFS102K										HC-SFS152K									
Nikki	NA100-40F															NA100-75F									
Sanyo						P60B13100										P60B13150									
Yaskawa																									

Motor cap. (kW) / Reduction ratio	2.0					2.2					2.5					3.0					3.2				
	Type No.	Output torque N·m	Output torque kgf·m	Permissible torque N·m	Permissible torque kgf·m	Type No.	Output torque N·m	Output torque kgf·m	Permissible torque N·m	Permissible torque kgf·m	Type No.	Output torque N·m	Output torque kgf·m	Permissible torque N·m	Permissible torque kgf·m	Type No.	Output torque N·m	Output torque kgf·m	Permissible torque N·m	Permissible torque kgf·m	Type No.	Output torque N·m	Output torque kgf·m	Permissible torque N·m	Permissible torque kgf·m
11	C	89.2	9.11	115	11.7	C	(95.6)	(9.75)	115	11.7	D	112	11.4	229	23.4	D	134	13.7	229	23.4	D	143	14.6	229	23.4
17	C	138	14.1	168	17.1	C	(140)	(14.3)	168	17.1	D	172	17.6	353	36.0	D	207	21.1	353	36.0	D	221	22.5	353	36.0
29	D	227	23.1	388	39.6	D	255	26.0	388	39.6	D	294	30.0	388	39.6	D	(323)	(33.0)	388	39.6	NE	329	33.6	944	96.3
35	D	274	27.9	388	39.6	D	307	31.3	388	39.6	D	(323)	(33.0)	388	39.6	NE	364	37.1	1090	111	NE	397	40.5	1090	111
47	D	(323)	(33.0)	388	39.6	NE	309	31.6	1000	102	NE	377	38.4	1000	102	NE	489	49.9	1000	102	NE	534	54.4	1000	102
59	NE	332	33.9	917	93.6	NE	388	39.6	917	93.6	NE	473	48.2	917	93.6	NE	613	62.6	917	93.6	NE	670	68.3	917	93.6
71	NE	399	40.8	741	75.6	NE	467	47.7	741	75.6	NE	569	58.0	741	75.6	NE	(617)	(63.0)	741	75.6	NE	(617)	(63.0)	741	75.6
Manufacturer: Pana	MDMA202										MDMA252					MDMA302									
Mitsubishi	HC-SFS202K																								
Nikki						NA100-110F																			
Sanyo	P60B13200/18200															P60B15300									
Yaskawa						SGMD-22A □ AB															SGMD-32A □ AB				

Motor cap. (kW) / Reduction ratio	3.5					3.7					4.0					4.5					5.0				
	Type No.	Output torque N·m	Output torque kgf·m	Permissible torque N·m	Permissible torque kgf·m	Type No.	Output torque N·m	Output torque kgf·m	Permissible torque N·m	Permissible torque kgf·m	Type No.	Output torque N·m	Output torque kgf·m	Permissible torque N·m	Permissible torque kgf·m	Type No.	Output torque N·m	Output torque kgf·m	Permissible torque N·m	Permissible torque kgf·m	Type No.	Output torque N·m	Output torque kgf·m	Permissible torque N·m	Permissible torque kgf·m
11	D	156	15.9	229	23.4	D	165	16.8	229	23.4	D	178	18.2	229	23.4	D	(191)	(19.5)	229	23.4	NE	219	22.4	520	53.1
17	D	241	24.6	353	36.0	D	255	26.0	353	36.0	D	276	28.1	353	36.0	D	(294)	(30.0)	353	36.0	NE	339	34.6	767	78.3
29	NE	371	37.8	944	96.3	NE	398	40.7	944	96.3	NE	440	44.9	944	96.3	NE	509	52.0	944	96.3	NE	578	59.0	944	96.3
35	NE	447	45.7	1090	111	NE	481	49.1	1090	111	NE	531	54.2	1090	111	NE	614	62.7	1090	111	NE	698	71.2	1090	111
47	NE	601	61.3	1000	102	NE	646	65.9	1000	102	NE	713	72.8	1000	102	NE	825	84.2	1000	102	NE	(833)	(85.0)	1000	102
59	NE	754	77.0	917	93.6	NE	(764)	(78.0)	917	93.6	NE	(764)	(78.0)	917	93.6	NE	(764)	(78.0)	917	93.6	NF	598	61.1	1830	187
71	NE	(617)	(63.0)	741	75.6	NE	(617)	(63.0)	741	75.6	NE	(617)	(63.0)	741	75.6	NF	551	56.2	1510	154	NF	720	73.5	1510	154
Manufacturer: Pana	MDMA352										MDMA402					MDMA452					MDMA502				
Mitsubishi	HC-SFS352K																				HC-SFS502K				
Nikki						NA100-180F																			
Sanyo	P60B18350															P60B18450									
Yaskawa											SGMD-40A □ AB														

Motor cap. (kW) / Reduction ratio	5.5					7.0					7.5					11.0					15.0				
	Type No.	Output torque N·m	Output torque kgf·m	Permissible torque N·m	Permissible torque kgf·m	Type No.	Output torque N·m	Output torque kgf·m	Permissible torque N·m	Permissible torque kgf·m	Type No.	Output torque N·m	Output torque kgf·m	Permissible torque N·m	Permissible torque kgf·m	Type No.	Output torque N·m	Output torque kgf·m	Permissible torque N·m	Permissible torque kgf·m	Type No.	Output torque N·m	Output torque kgf·m	Permissible torque N·m	Permissible torque kgf·m
11	NE	245	25.0	520	53.1	NE	312	31.9	520	53.1	NE	335	34.2	520	53.1	NE	(434)	(44.3)	520	53.1	NF	637	65.0	873	89.1
17	NE	379	38.7	767	78.3	NE	483	49.3	767	78.3	NE	517	52.8	767	78.3	NF	659	67.3	1240	127	NF	984	100	1240	127
29	NE	647	66.0	944	96.3	NE	(787)	(80.3)	944	96.3	NE	(787)	(80.3)	944	96.3	NF	1130	115	1890	193	NF	(1580)	(161)	1890	193
35	NE	781	79.7	1090	111	NE	(907)	(92.5)	1090	111	NE	(907)	(92.5)	1090	111	NF	1360	138	1940	198	—	—	—	—	—
47	NF	589	60.1	1940	198	NF	925	94.4	1940	198	NF	1040	106	1940	198	NF	(1620)	(165)	1940	198	—	—	—	—	—
59	NF	739	75.4	1830	187	NF	1160	119	1830	187	NF	1300	133	1830	187	—	—	—	—	—	—	—	—	—	—
71	NF	890	90.8	1510	154	NF	(1250)	(128)	1510	154	NF	(1250)	(128)	1510	154	—	—	—	—	—	—	—	—	—	—
Manufacturer: Pana																									
Mitsubishi						HC-SFS702K																			
Nikki	NA100-270F										NA100-370F					NA100-550F					NA100-750F				
Sanyo																									
Yaskawa																									

Pana : Panasonic

Note : The combination of servo motor and reducer in the Performance Tables is based on rated torque of the servo motor. In case of sharp acceleration/deceleration, it may impair the reducer life, so see [Selection Procedure] on the EF41 page.

■ Standard spec.

Note) In general uses, apply the torque in ( ). However, coefficient of utilization is set to 1.2.

Motor cap. (kW) / Reduction ratio	0.1					0.2					0.4					0.5					0.75				
	Type No.	Output torque N·m	Output torque kgf·m	Permissible torque N·m	Permissible torque kgf·m	Type No.	Output torque N·m	Output torque kgf·m	Permissible torque N·m	Permissible torque kgf·m	Type No.	Output torque N·m	Output torque kgf·m	Permissible torque N·m	Permissible torque kgf·m	Type No.	Output torque N·m	Output torque kgf·m	Permissible torque N·m	Permissible torque kgf·m	Type No.	Output torque N·m	Output torque kgf·m	Permissible torque N·m	Permissible torque kgf·m
11	M	3.92	0.40	6.57	0.67	A	7.74	0.79	42.3	4.32	A	18.2	1.86	42.3	4.32	A	23.4	2.39	42.3	4.32	A	(35.3)	(3.60)	42.3	4.32
17	M	6.08	0.62	9.70	0.99	A	11.9	1.21	43.2	4.41	A	28.1	2.87	43.2	4.41	A	36.1	3.68	43.2	4.41	B	54.8	5.59	132	13.5
29	M	(8.82)	(0.90)	10.6	1.08	A	20.3	2.07	49.4	5.04	A	(41.2)	(4.20)	49.4	5.04	B	60.1	6.13	132	13.5	B	93.4	9.53	132	13.5
35	M	(8.82)	(0.90)	10.6	1.08	A	24.5	2.50	53.8	5.49	B	55.9	5.70	132	13.5	B	72.5	7.40	132	13.5	B	(111)	(11.3)	132	13.5
47	M	(8.82)	(0.90)	10.6	1.08	A	32.9	3.36	48.5	4.95	B	75.0	7.65	132	13.5	B	97.4	9.94	132	13.5	C	136	13.9	309	31.5
59	M	(8.82)	(0.90)	10.6	1.08	A	(38.2)	(3.90)	45.9	4.68	B	94.2	9.61	123	12.6	B	(103)	(10.5)	123	12.6	C	171	17.4	300	30.6
71	M	(8.82)	(0.90)	10.6	1.08	B	45.5	4.64	97.0	9.90	C	86.8	8.86	270	27.6	C	121	12.3	273	27.9	C	206	21.0	273	27.9
Manufacturer: Pana																						MDMA082			
Manufacturer: Mitsubishi																	HC-SFS52K								
Manufacturer: Nikki																									
Manufacturer: Sanyo																	P60B13050								
Manufacturer: Yaskawa																									

Motor cap. (kW) / Reduction ratio	0.8					1.0					1.2					1.5					1.6				
	Type No.	Output torque N·m	Output torque kgf·m	Permissible torque N·m	Permissible torque kgf·m	Type No.	Output torque N·m	Output torque kgf·m	Permissible torque N·m	Permissible torque kgf·m	Type No.	Output torque N·m	Output torque kgf·m	Permissible torque N·m	Permissible torque kgf·m	Type No.	Output torque N·m	Output torque kgf·m	Permissible torque N·m	Permissible torque kgf·m	Type No.	Output torque N·m	Output torque kgf·m	Permissible torque N·m	Permissible torque kgf·m
11	B	37.8	3.86	97.0	9.90	B	47.2	4.82	97.0	9.90	B	56.6	5.78	97.0	9.90	B	70.9	7.23	97.0	9.90	B	75.6	7.71	97.0	9.90
17	B	58.4	5.96	132	13.5	B	73.0	7.45	132	13.5	B	87.6	8.94	132	13.5	B	110	11.2	132	13.5	B	(110)	(11.2)	132	13.5
29	B	100	10.2	132	13.5	B	(111)	(11.3)	132	13.5	C	146	14.9	309	31.5	C	187	19.1	309	31.5	C	199	20.3	309	31.5
35	B	(111)	(11.3)	132	13.5	C	143	14.6	309	31.5	C	176	18.0	309	31.5	C	225	23.0	309	31.5	C	240	24.5	309	31.5
47	C	147	15.0	309	31.5	C	192	19.6	309	31.5	C	237	24.2	309	31.5	D	270	27.5	706	72.0	D	292	29.8	706	72.0
59	C	185	18.9	300	30.6	C	241	24.6	300	30.6	D	253	25.8	697	71.1	D	338	34.5	697	71.1	D	366	37.3	697	71.1
71	C	222	22.7	273	27.9	D	237	24.2	662	67.5	D	305	31.1	662	67.5	D	407	41.5	662	67.5	D	440	44.9	662	67.5
Manufacturer: Pana							MDMA102										MDMA152								
Manufacturer: Mitsubishi							HC-SFS102K										HC-SFS152K								
Manufacturer: Nikki		NA100-40F															NA100-75F								
Manufacturer: Sanyo							P60B13100										P60B13150								
Manufacturer: Yaskawa																									

Motor cap. (kW) / Reduction ratio	2.0					2.2					2.5					3.0					3.2				
	Type No.	Output torque N·m	Output torque kgf·m	Permissible torque N·m	Permissible torque kgf·m	Type No.	Output torque N·m	Output torque kgf·m	Permissible torque N·m	Permissible torque kgf·m	Type No.	Output torque N·m	Output torque kgf·m	Permissible torque N·m	Permissible torque kgf·m	Type No.	Output torque N·m	Output torque kgf·m	Permissible torque N·m	Permissible torque kgf·m	Type No.	Output torque N·m	Output torque kgf·m	Permissible torque N·m	Permissible torque kgf·m
11	C	94.5	9.64	221	22.5	C	104	10.6	221	22.5	C	119	12.1	221	22.5	C	142	14.5	221	22.5	C	151	15.4	221	22.5
17	C	146	14.9	309	31.5	C	161	16.4	309	31.5	C	182	18.6	309	31.5	C	220	22.4	309	31.5	C	233	23.8	309	31.5
29	C	249	25.4	309	31.5	C	(258)	(26.3)	309	31.5	D	305	31.1	706	72.0	D	373	38.1	706	72.0	D	399	40.7	706	72.0
35	D	284	29.0	706	72.0	D	318	32.4	706	72.0	D	368	37.5	706	72.0	D	451	46.0	706	72.0	D	481	49.1	706	72.0
47	D	381	38.9	706	72.0	D	426	43.5	706	72.0	D	494	50.4	706	72.0	D	(588)	(60.0)	706	72.0	NE	552	56.3	1810	185
59	D	479	48.9	697	71.1	D	535	54.6	697	71.1	D	(581)	(59.3)	697	71.1	NE	637	65.0	1680	171	NE	693	70.7	1680	171
71	D	(552)	(56.3)	662	67.5	D	(552)	(56.3)	662	67.5	NE	597	60.9	1350	138	NE	766	78.2	1350	138	NE	834	85.1	1350	138
Manufacturer: Pana		MDMA202										MDMA252					MDMA302								
Manufacturer: Mitsubishi		HC-SFS202K																							
Manufacturer: Nikki							NA100-110F																		
Manufacturer: Sanyo		P60B13200/18200															P60B15300								
Manufacturer: Yaskawa							SGMD-22A □ AB															SGMD-32A □ AB			

Motor cap. (kW) / Reduction ratio	3.5					3.7					4.0					4.5					5.0				
	Type No.	Output torque N·m	Output torque kgf·m	Permissible torque N·m	Permissible torque kgf·m	Type No.	Output torque N·m	Output torque kgf·m	Permissible torque N·m	Permissible torque kgf·m	Type No.	Output torque N·m	Output torque kgf·m	Permissible torque N·m	Permissible torque kgf·m	Type No.	Output torque N·m	Output torque kgf·m	Permissible torque N·m	Permissible torque kgf·m	Type No.	Output torque N·m	Output torque kgf·m	Permissible torque N·m	Permissible torque kgf·m
11	C	166	16.9	221	22.5	C	174	17.8	221	22.5	C	(184)	(18.8)	221	22.5	D	213	21.7	423	43.2	D	236	24.1	423	43.2
17	C	256	26.1	309	31.5	C	(258)	(26.3)	309	31.5	D	292	29.8	653	66.6	D	328	33.5	653	66.6	D	366	37.3	653	66.6
29	D	436	44.5	706	72.0	D	461	47.0	706	72.0	D	498	50.8	706	72.0	D	561	57.2	706	72.0	D	(588)	(60.0)	706	72.0
35	D	526	53.7	706	72.0	D	557	56.8	706	72.0	D	(588)	(60.0)	706	72.0	D	(588)	(60.0)	706	72.0	NE	711	72.6	1990	203
47	NE	619	63.2	1810	185	NE	664	67.8	1810	185	NE	731	74.6	1810	185	NE	844	86.1	1810	185	NE	956	97.5	1810	185
59	NE	777	79.3	1680	171	NE	834	85.1	1680	171	NE	918	93.7	1680	171	NE	1060	108	1680	171	NE	1200	122	1680	171
71	NE	936	95.5	1350	138	NE	1000	102	1350	138	NE	1110	113	1350	138	NE	(1130)	(115)	1350	138	NF	1100	113	2740	280
Manufacturer: Pana		MDMA352										MDMA402					MDMA452					MDMA502			
Manufacturer: Mitsubishi		HC-SFS352K																				HC-SFS502K			
Manufacturer: Nikki							NA100-180F																		
Manufacturer: Sanyo		P60B18350															P60B18450								
Manufacturer: Yaskawa												SGMD-40A □ AB													

Motor cap. (kW) / Reduction ratio	5.5					7.0					7.5					11.0					15.0				
	Type No.	Output torque N·m	Output torque kgf·m	Permissible torque N·m	Permissible torque kgf·m	Type No.	Output torque N·m	Output torque kgf·m	Permissible torque N·m	Permissible torque kgf·m	Type No.	Output torque N·m	Output torque kgf·m	Permissible torque N·m	Permissible torque kgf·m	Type No.	Output torque N·m	Output torque kgf·m	Permissible torque N·m	Permissible torque kgf·m	Type No.	Output torque N·m	Output torque kgf·m	Permissible torque N·m	Permissible torque kgf·m
11	D	260	26.5	423	43.2	D	330	33.7	423	43.2	D	(353)	(36.0)	423	43.2	NE	519	53.0	961	98.1	NE	709	72.3	961	98.1
17	D	402	41.0	653	66.6	D	512	52.2	653	66.6	D	(544)	(55.5)	653	66.6	NE	804	82.0	1400	143	NE	1100	112	1400	143
29	NE	659	67.2	1720	176	NE	866	88.4	1720	176	NE	934	95.3	1720	176	NE	1370	140	1720	176	NF	1830	187	3440	351
35	NE	796	81.2	1990	203	NE	1050	107	1990	203	NE	1130	115	1990	203	NE	1660	169	1990	203	NF	2210	226	3530	360
47	NE	1070	109	1810	185	NE	1400	143	1810	185	NE	(1520)	(155)	1810	185	NF	2080	212	3530	360	NF	(2940)	(300)	3530	360
59	NE	1340	137	1680	171	NF	1480	151	3340	341	NF	1620	165	3340	341	NF	2610	266	3340	341	—	—	—	—	—
71	NF	1270	130	2740	280	NF	1780	182	2740	280	NF	1950	199	2740	280	—	—	—	—	—	—	—	—	—	—
Manufacturer: Pana																									
Manufacturer: Mitsubishi							HC-SFS702K																		
Manufacturer: Nikki		NA100-270F										NA100-370F					NA100-550F					NA100-750F			
Manufacturer: Sanyo																									
Manufacturer: Yaskawa																									

Pana : Panasonic

Performance Tables

<Input speed 3000rpm>

■No-backlash spec.

Note) In general uses, apply the torque in ( ). However, coefficient of utilization is set to 1.2.

Motor cap. (kW) / Reduction ratio	0.1					0.15					0.2					0.3					0.4				
	Type No.	Output torque N·m	Output torque kgf·m	Permissible torque N·m	Permissible torque kgf·m	Type No.	Output torque N·m	Output torque kgf·m	Permissible torque N·m	Permissible torque kgf·m	Type No.	Output torque N·m	Output torque kgf·m	Permissible torque N·m	Permissible torque kgf·m	Type No.	Output torque N·m	Output torque kgf·m	Permissible torque N·m	Permissible torque kgf·m	Type No.	Output torque N·m	Output torque kgf·m	Permissible torque N·m	Permissible torque kgf·m
11	M	0.91	0.09	3.14	0.32	M	2.66	0.27	3.14	0.32	M	(2.65)	(0.27)	3.14	0.32	B	5.54	0.57	46.5	4.74	B	9.04	0.92	46.5	4.74
17	M	1.41	0.14	4.80	0.49	M	(4.02)	(0.41)	4.80	0.49	M	(4.02)	(0.41)	4.80	0.49	B	8.56	0.87	63.5	6.48	B	14.0	1.43	63.5	6.48
29	M	2.41	0.25	5.00	0.51	M	(4.21)	(0.43)	5.00	0.51	M	(4.21)	(0.43)	5.00	0.51	B	14.6	1.49	63.5	6.48	B	23.8	2.43	63.5	6.48
35	M	2.90	0.30	5.10	0.52	M	(4.21)	(0.43)	5.10	0.52	M	(4.21)	(0.43)	5.10	0.52	B	17.6	1.80	63.5	6.48	B	28.8	2.94	63.5	6.48
47	M	3.90	0.40	5.10	0.52	M	(4.21)	(0.43)	5.10	0.52	M	(4.21)	(0.43)	5.10	0.52	B	23.7	2.42	63.5	6.48	B	38.6	3.94	63.5	6.48
59	M	(4.21)	(0.43)	5.10	0.52	M	(4.21)	(0.43)	5.10	0.52	M	(4.21)	(0.43)	5.10	0.52	B	29.7	3.03	59.6	6.08	B	48.5	4.95	59.6	6.08
71	M	(4.21)	(0.43)	5.10	0.52	M	(4.21)	(0.43)	5.10	0.52	M	(4.21)	(0.43)	5.10	0.52	B	35.8	3.65	46.5	4.74	B	(38.7)	(3.95)	46.5	4.74
Manufacturer: Pana	MSMA012										MSMA022										MSMA042				
Mitsubishi																									
Nikki	NA50-10										NA50-20										NA50-40				
Sanyo	P50B05010										P50B07020					P50B07030					P50B07040				
Yaskawa	SGMAH-01A □ A41										SGMAH-02A □ A41										SGMAH-04A □ A41				

Motor cap. (kW) / Reduction ratio	0.5					0.6					0.7					0.75					1.0				
	Type No.	Output torque N·m	Output torque kgf·m	Permissible torque N·m	Permissible torque kgf·m	Type No.	Output torque N·m	Output torque kgf·m	Permissible torque N·m	Permissible torque kgf·m	Type No.	Output torque N·m	Output torque kgf·m	Permissible torque N·m	Permissible torque kgf·m	Type No.	Output torque N·m	Output torque kgf·m	Permissible torque N·m	Permissible torque kgf·m	Type No.	Output torque N·m	Output torque kgf·m	Permissible torque N·m	Permissible torque kgf·m
11	B	12.5	1.28	46.5	4.74	B	16.0	1.64	46.5	4.74	B	19.5	1.99	46.5	4.74	B	21.3	2.17	46.5	4.74	B	29.7	3.04	46.5	4.74
17	B	19.4	1.98	63.5	6.48	B	24.8	2.53	63.5	6.48	B	30.2	3.08	63.5	6.48	B	32.9	3.36	63.5	6.48	B	46.0	4.69	63.5	6.48
29	B	33.1	3.37	63.5	6.48	B	42.3	4.32	63.5	6.48	B	51.5	5.26	63.5	6.48	B	(52.9)	(5.40)	63.5	6.48	C	60.4	6.17	147	15.0
35	B	39.9	4.07	63.5	6.48	B	51.0	5.21	63.5	6.48	B	(52.9)	(5.40)	63.5	6.48	B	(52.9)	(5.40)	63.5	6.48	C	72.9	7.44	147	15.0
47	B	(52.9)	(5.40)	63.5	6.48	B	(52.9)	(5.40)	63.5	6.48	C	53.1	5.42	147	15.0	C	60.6	6.18	147	15.0	C	98.0	10.0	147	15.0
59	B	(49.7)	(5.07)	59.6	6.08	C	47.9	4.89	139	14.2	C	66.6	6.80	139	14.2	C	76.0	7.76	139	14.2	C	(116)	(11.8)	139	14.2
71	B	(38.7)	(3.95)	46.5	4.74	C	57.6	5.88	131	13.4	C	80.2	8.18	131	13.4	C	91.5	9.34	131	13.4	C	(110)	(11.2)	131	13.4
Manufacturer: Pana																MSMA082					MSMA102				
Mitsubishi	HC-SFS53K																				HC-SFS103K				
Nikki																NA50-75					NA503-102				
Sanyo	P50B08050															P50B08075					P50B08100				
Yaskawa																SGMAH-08A □ A41					SGMSH-10A □ A61				

Motor cap. (kW) / Reduction ratio	1.5					2.0					2.5					3.0					3.5				
	Type No.	Output torque N·m	Output torque kgf·m	Permissible torque N·m	Permissible torque kgf·m	Type No.	Output torque N·m	Output torque kgf·m	Permissible torque N·m	Permissible torque kgf·m	Type No.	Output torque N·m	Output torque kgf·m	Permissible torque N·m	Permissible torque kgf·m	Type No.	Output torque N·m	Output torque kgf·m	Permissible torque N·m	Permissible torque kgf·m	Type No.	Output torque N·m	Output torque kgf·m	Permissible torque N·m	Permissible torque kgf·m
11	C	40.4	4.13	101	10.3	C	57.9	5.91	101	10.3	C	74.4	7.59	101	10.3	C	(84.1)	(8.58)	101	10.3	D	97.5	9.95	201	20.5
17	C	62.5	6.38	147	15.0	C	89.5	9.13	147	15.0	C	115	11.7	147	15.0	D	124	12.6	310	31.6	D	151	15.4	310	31.6
29	C	107	10.9	147	15.0	D	119	12.1	341	34.8	D	165	16.8	341	34.8	D	211	21.5	341	34.8	D	257	26.2	341	34.8
35	C	(123)	(12.5)	147	15.0	D	143	14.6	341	34.8	D	199	20.3	341	34.8	D	255	26.0	341	34.8	D	(284)	(29.0)	341	34.8
47	D	117	12.0	341	34.8	D	192	19.6	341	34.8	D	267	27.2	341	34.8	D	(284)	(29.0)	341	34.8	—	—	—	—	—
59	D	147	15.0	333	34.0	D	241	24.6	333	34.0	D	(277)	(28.3)	333	34.0	—	—	—	—	—	—	—	—	—	—
71	D	177	18.1	318	32.4	D	(265)	(27.0)	318	32.4	—	—	—	—	—	—	—	—	—	—	—	—	—	—	—
Manufacturer: Pana	MSMA152					MSMA202					MSMA252					MSMA302					MSMA352				
Mitsubishi	HC-SFS153K					HC-SFS203K															HC-SFS353K				
Nikki	NA503-152					NA503-202					NA503-252					NA503-302					NA503-352				
Sanyo																									
Yaskawa	SGMSH-15A □ A61					SGMSH-20A □ A61										SGMSH-30A □ A61									

Motor cap. (kW) / Reduction ratio	4.0					4.5					5.0				
	Type No.	Output torque N·m	Output torque kgf·m	Permissible torque N·m	Permissible torque kgf·m	Type No.	Output torque N·m	Output torque kgf·m	Permissible torque N·m	Permissible torque kgf·m	Type No.	Output torque N·m	Output torque kgf·m	Permissible torque N·m	Permissible torque kgf·m
11	D	115	11.7	201	20.5	D	132	13.5	201	20.5	D	149	15.2	201	20.5
17	D	178	18.1	310	31.6	D	205	20.9	310	31.6	D	230	23.5	310	31.6
29	D	(284)	(29.0)	341	34.8	—	—	—	—	—	—	—	—	—	—
35	—	—	—	—	—	—	—	—	—	—	—	—	—	—	—
47	—	—	—	—	—	—	—	—	—	—	—	—	—	—	—
59	—	—	—	—	—	—	—	—	—	—	—	—	—	—	—
71	—	—	—	—	—	—	—	—	—	—	—	—	—	—	—
Manufacturer: Pana	MSMA402					MSMA452					MSMA502				
Mitsubishi															
Nikki	NA503-402					NA503-452					NA503-502				
Sanyo															
Yaskawa	SGMSH-40A □ A61										SGMSH-50A □ A61				

Pana : Panasonic

Note : The combination of servo motor and reducer in the Performance Tables is based on rated torque of the servo motor. In case of sharp acceleration/deceleration, it may impair the reducer life, so see [Selection Procedure] on the EF41 page.

■ Standard spec.

Note) In general uses, apply the torque in ( ). However, coefficient of utilization is set to 1.2.

Motor cap. (kW) / Reduction ratio	0.1					0.15					0.2					0.3					0.4				
	Type No.	Output torque N·m	Output torque kgf·m	Permissible torque N·m	Permissible torque kgf·m	Type No.	Output torque N·m	Output torque kgf·m	Permissible torque N·m	Permissible torque kgf·m	Type No.	Output torque N·m	Output torque kgf·m	Permissible torque N·m	Permissible torque kgf·m	Type No.	Output torque N·m	Output torque kgf·m	Permissible torque N·m	Permissible torque kgf·m	Type No.	Output torque N·m	Output torque kgf·m	Permissible torque N·m	Permissible torque kgf·m
11	M	1.96	0.20	5.68	0.58	M	3.72	0.38	5.68	0.58	M	(4.80)	(0.49)	5.68	0.58	B	6.37	0.65	85.2	8.69	B	9.90	1.01	85.2	8.69
17	M	3.04	0.31	8.53	0.87	M	5.78	0.59	8.53	0.87	M	(7.06)	(0.72)	8.53	0.87	B	9.90	1.01	117	11.9	B	15.3	1.56	117	11.9
29	M	5.29	0.54	9.31	0.95	M	(7.74)	(0.79)	9.31	0.95	—	—	—	—	—	B	16.9	1.72	117	11.9	B	26.1	2.66	117	11.9
35	M	6.37	0.65	9.31	0.95	—	—	—	—	—	—	—	—	—	—	B	20.4	2.08	117	11.9	B	31.6	3.22	117	11.9
47	M	(7.74)	(0.79)	9.31	0.95	—	—	—	—	—	—	—	—	—	—	B	27.3	2.79	117	11.9	B	42.3	4.32	117	11.9
59	M	(7.74)	(0.79)	9.31	0.95	—	—	—	—	—	—	—	—	—	—	B	34.3	3.50	109	11.1	B	53.1	5.42	109	11.1
71	—	—	—	—	—	—	—	—	—	—	—	—	—	—	—	B	41.4	4.22	85.2	8.69	B	63.9	6.52	85.2	8.69
Manufacturer: Pana	MSMA012										MSMA022										MSMA042				
Manufacturer: Mitsubishi																									
Manufacturer: Nikki	NA50-10										NA50-20										NA50-40				
Manufacturer: Sanyo	P50B05010										P50B07020					P50B07030					P50B07040				
Manufacturer: Yaskawa	SGMAH-01A □ A41										SGMAH-02A □ A41										SGMAH-04A □ A41				

Motor cap. (kW) / Reduction ratio	0.5					0.6					0.7					0.75					1.0				
	Type No.	Output torque N·m	Output torque kgf·m	Permissible torque N·m	Permissible torque kgf·m	Type No.	Output torque N·m	Output torque kgf·m	Permissible torque N·m	Permissible torque kgf·m	Type No.	Output torque N·m	Output torque kgf·m	Permissible torque N·m	Permissible torque kgf·m	Type No.	Output torque N·m	Output torque kgf·m	Permissible torque N·m	Permissible torque kgf·m	Type No.	Output torque N·m	Output torque kgf·m	Permissible torque N·m	Permissible torque kgf·m
11	B	13.4	1.37	85.2	8.69	B	16.9	1.72	85.2	8.69	B	20.4	2.08	85.2	8.69	B	22.1	2.26	85.2	8.69	B	30.9	3.15	85.2	8.69
17	B	20.7	2.11	117	11.9	B	26.2	2.67	117	11.9	B	31.6	3.22	117	11.9	B	34.2	3.49	117	11.9	B	47.7	4.87	117	11.9
29	B	35.4	3.61	117	11.9	B	44.6	4.55	117	11.9	B	53.8	5.49	117	11.9	B	58.4	5.96	117	11.9	B	81.4	8.31	117	11.9
35	B	42.6	4.35	117	11.9	B	53.8	5.49	117	11.9	B	64.9	6.62	117	11.9	B	70.5	7.19	117	11.9	B	(97.2)	(9.92)	117	11.9
47	B	57.2	5.84	117	11.9	B	72.2	7.37	117	11.9	B	87.2	8.90	117	11.9	B	94.7	9.66	117	11.9	C	108	11.0	271	27.7
59	B	71.9	7.34	109	11.1	B	90.7	9.25	109	11.1	B	(90.7)	(9.25)	109	11.1	C	88.8	9.06	264	26.9	C	136	13.9	264	26.9
71	B	(71.0)	(7.24)	85.2	8.69	C	72.9	7.44	240	24.5	C	95.6	9.75	240	24.5	C	107	10.9	240	24.5	C	164	16.7	240	24.5
Manufacturer: Pana																MSMA082					MSMA102				
Manufacturer: Mitsubishi	HC-SFS53K																				HC-SFS103K				
Manufacturer: Nikki																NA50-75					NA503-102				
Manufacturer: Sanyo	P50B08050															P50B08075					P50B08100				
Manufacturer: Yaskawa																SGMAH-08A □ A41					SGMSH-10A □ A61				

Motor cap. (kW) / Reduction ratio	1.5					2.0					2.5					3.0					3.5				
	Type No.	Output torque N·m	Output torque kgf·m	Permissible torque N·m	Permissible torque kgf·m	Type No.	Output torque N·m	Output torque kgf·m	Permissible torque N·m	Permissible torque kgf·m	Type No.	Output torque N·m	Output torque kgf·m	Permissible torque N·m	Permissible torque kgf·m	Type No.	Output torque N·m	Output torque kgf·m	Permissible torque N·m	Permissible torque kgf·m	Type No.	Output torque N·m	Output torque kgf·m	Permissible torque N·m	Permissible torque kgf·m
11	B	47.2	4.82	85.2	8.69	B	63.0	6.43	85.2	8.69	C	77.8	7.94	194	19.8	C	94.5	9.64	194	19.8	C	110	11.2	194	19.8
17	B	73.0	7.45	117	11.9	B	(97.2)	(9.92)	117	11.9	C	121	12.3	271	27.7	C	146	14.9	271	27.7	C	171	17.4	271	27.7
29	C	113	11.5	271	27.7	C	159	16.2	271	27.7	C	205	20.9	271	27.7	C	(226)	(23.1)	271	27.7	D	268	27.3	619	63.2
35	C	136	13.9	271	27.7	C	192	19.6	271	27.7	C	(226)	(23.1)	271	27.7	D	268	27.3	619	63.2	D	323	33.0	619	63.2
47	C	183	18.7	271	27.7	C	(226)	(23.1)	271	27.7	D	284	29.0	619	63.2	D	360	36.7	619	63.2	D	434	44.3	619	63.2
59	C	(220)	(22.4)	264	26.9	D	264	26.9	612	62.4	D	357	36.4	612	62.4	D	451	46.0	612	62.4	D	(510)	(52.0)	612	62.4
71	D	204	20.8	581	59.3	D	317	32.3	581	59.3	D	430	43.9	581	59.3	D	(484)	(49.4)	581	59.3	—	—	—	—	—
Manufacturer: Pana	MSMA152					MSMA202					MSMA252					MSMA302					MSMA352				
Manufacturer: Mitsubishi	HC-SFS153K					HC-SFS203K															HC-SFS353K				
Manufacturer: Nikki	NA503-152					NA503-202					NA503-252					NA503-302					NA503-352				
Manufacturer: Sanyo																									
Manufacturer: Yaskawa	SGMSH-15A □ A61					SGMSH-20A □ A61										SGMSH-30A □ A61									

Motor cap. (kW) / Reduction ratio	4.0					4.5					5.0				
	Type No.	Output torque N·m	Output torque kgf·m	Permissible torque N·m	Permissible torque kgf·m	Type No.	Output torque N·m	Output torque kgf·m	Permissible torque N·m	Permissible torque kgf·m	Type No.	Output torque N·m	Output torque kgf·m	Permissible torque N·m	Permissible torque kgf·m
11	C	126	12.9	194	19.8	C	142	14.5	194	19.8	C	158	16.1	194	19.8
17	C	195	19.9	271	27.7	C	220	22.4	271	27.7	C	(226)	(23.1)	271	27.7
29	D	314	32.0	619	63.2	D	360	36.7	619	63.2	D	407	41.5	619	63.2
35	D	379	38.7	619	63.2	D	434	44.3	619	63.2	D	490	50.0	619	63.2
47	D	509	51.9	619	63.2	D	(516)	(52.7)	619	63.2	—	—	—	—	—
59	—	—	—	—	—	—	—	—	—	—	—	—	—	—	—
71	—	—	—	—	—	—	—	—	—	—	—	—	—	—	—
Manufacturer: Pana	MSMA402					MSMA452					MSMA502				
Manufacturer: Mitsubishi															
Manufacturer: Nikki	NA503-402					NA503-452					NA503-502				
Manufacturer: Sanyo															
Manufacturer: Yaskawa	SGMSH-40A □ A61										SGMSH-50A □ A61				

Pana : Panasonic

■ Input speed 2000rpm

ERK type (base-combined, horizontal type)

A~C types

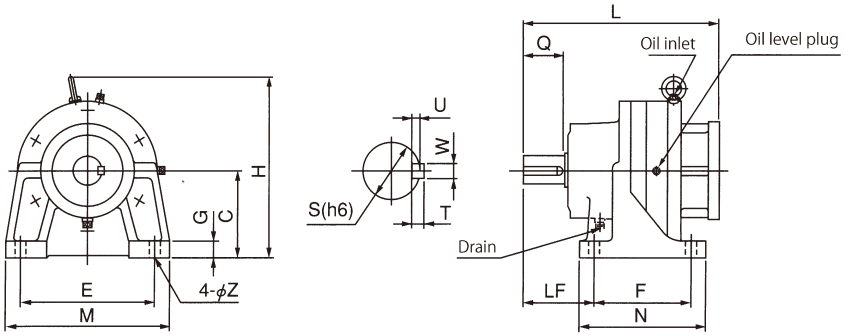

Figure-1

D, NE types

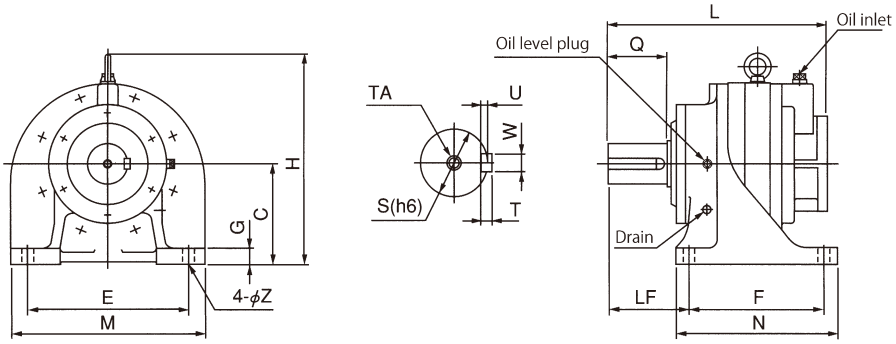

Applicable servo motor type	Motor cap. (kW)	Reducer model	Reducer type no.			Length	Output shaft end					Height		Horizontal base Figure-1 Base						
				NB	Standard	L	Q	S	W×U	T	TA	H	C	N	F	LF	M	E	G	Z
MDMA082	0.75	ERK-	A	—	○	213	30	22	6×3.5	6	—	196	90	120	90	65	175	145	16	12
			B	○	○	245	40	28	8×4	7	—	221	115	135	105	75	175	145	16	12
			C	○	○	264	55	38	10×5	8	—	241	115	170	130	95	220	180	22	15
			D	○	—	334	80	55	16×6	10	—	299	140	200	150	120	275	225	26	19
MDMA102	1.0	ERK-	B	○	○	223	40	28	8×4	7	—	221	115	135	105	75	175	145	16	12
			C	○	○	264	55	38	10×5	8	—	241	115	170	130	95	220	180	22	15
			D	○	○	334	80	55	16×6	10	—	299	140	200	150	120	275	225	26	19
MDMA152	1.5	ERK-	B	—	○	223	40	28	8×4	7	—	221	115	135	105	75	175	145	16	12
			C	○	○	264	55	38	10×5	8	—	241	115	170	130	95	220	180	22	15
			D	○	○	334	80	55	16×6	10	—	299	140	200	150	120	275	225	26	19
MDMA202	2.0	ERK-	C	○	○	264	55	38	10×5	8	—	241	115	170	130	95	220	180	22	15
			D	○	○	334	80	55	16×6	10	—	299	140	200	150	120	275	225	26	19
			NE	○	—	410	110	75	20×7.5	12	M16 depth 30	399	185	300	250	150	360	300	30	22
MDMA252	2.5	ERK-	C	—	○	279	55	38	10×5	8	—	266	140	170	130	95	220	180	22	15
			D	○	○	339	80	55	16×6	10	—	299	140	200	150	120	275	225	26	19
			NE	○	○	410	110	75	20×7.5	12	M16 depth 30	399	185	300	250	150	360	300	30	22
MDMA302	3.0	ERK-	C	—	○	279	55	38	10×5	8	—	266	140	170	130	95	220	180	22	15
			D	○	○	339	80	55	16×6	10	—	299	140	200	150	120	275	225	26	19
			NE	○	○	410	110	75	20×7.5	12	M16 depth 30	399	185	300	250	150	360	300	30	22
MDMA352	3.5	ERK-	C	—	○	286	55	38	10×5	8	—	241	115	170	130	95	220	180	22	15
			D	○	○	346	80	55	16×6	10	—	299	140	200	150	120	275	225	26	19
			NE	○	○	408	110	75	20×7.5	12	M16 depth 30	399	185	300	250	150	360	300	30	22
MDMA402	4.0	ERK-	C	—	○	286	55	38	10×5	8	—	241	115	170	130	95	220	180	22	15
			D	○	○	346	80	55	16×6	10	—	299	140	200	150	120	275	225	26	19
			NE	○	○	408	110	75	20×7.5	12	M16 depth 30	399	185	300	250	150	360	300	30	22
MDMA452	4.5	ERK-	D	○	○	364	80	55	16×6	10	—	299	140	200	150	120	275	225	26	19
			NE	○	○	408	110	75	20×7.5	12	M16 depth 30	399	185	300	250	150	360	300	30	22
MDMA502	5.0	ERK-	D	—	○	364	80	55	16×6	10	—	299	140	200	150	120	275	225	26	19
			NE	○	○	408	110	75	20×7.5	12	M16 depth 30	399	185	300	250	150	360	300	30	22

Motor-combined flange

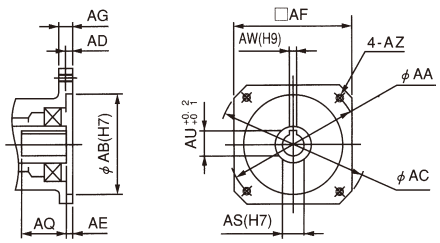

Figure-3

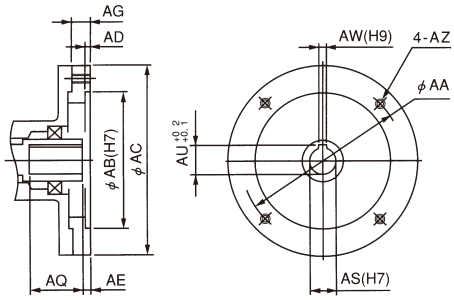

Figure-4

ERK-V type (flange-combined standing type)

A~C types

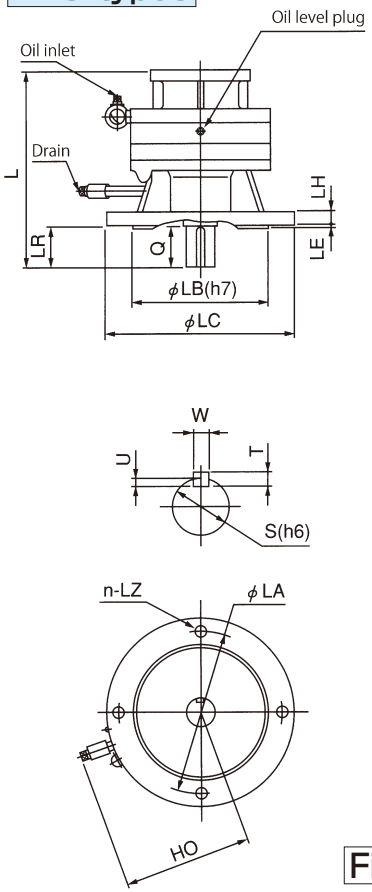

D, NE types

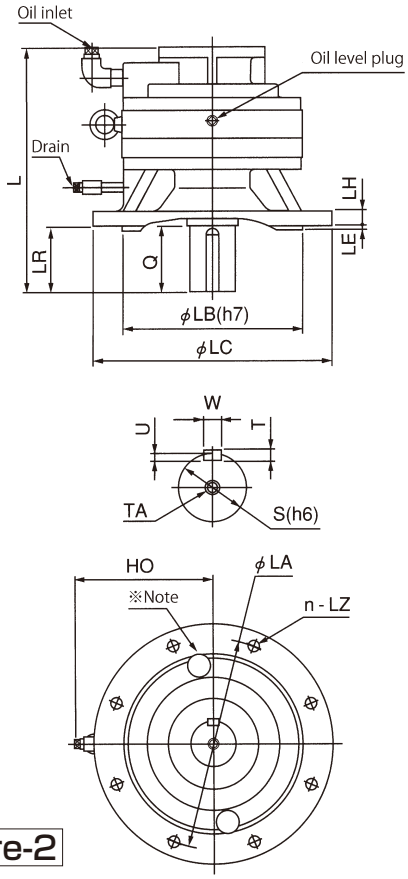

Figure-2

※Note : The NE · NF type of no-backlash specification includes a hole.

Standing flange Figure-2																								
Flange								Defective motor flange												Illust. no.	Flow(ℓ)		Weight(kg)	
LC	LB	LA	LE	LH	n-LZ	LR	HO	AA	AB	AC	AD	AE	AF	AG	AZ	AQ	AS	AW	AU		Horizontal	Standing	Horizontal	Standing
160	110	130	4	14	4-12	30	114	145	110	165	7	7	130	15	M8	50	19	6	21.5	3	0.16	0.29	15	15
200	130	165	4	14	4-12	40	132	145	110	165	7	7	130	15	M8	50	19	6	21.5	3	0.22	0.4	17	17
250	180	215	4	18	4-15	55	170	130	110	150	6	7	120	15	M8	50	19	6	21.5	3	0.45	0.81	26	26
300	230	265	5	22	8-15	80	198	145	110	165	7	7	130	18	M8	50	19	6	21.5	3	0.9	1.5	47	47
200	130	165	4	14	4-12	40	132	145	110	165	7	8	130	15	M8	49	22	8	25	3	0.22	0.4	14	14
250	180	215	4	18	4-15	55	170	145	110	165	7	8	130	15	M8	49	22	8	25	3	0.45	0.81	26	26
300	230	265	5	22	8-15	80	198	145	110	165	7	10	130	18	M8	47	22	8	25	3	0.9	1.5	47	47
200	130	165	4	14	4-12	40	132	145	110	165	7	8	130	15	M8	49	22	8	25	3	0.22	0.4	14	14
250	180	215	4	18	4-15	55	170	145	110	165	7	8	130	15	M8	49	22	8	25	3	0.45	0.81	26	26
300	230	265	5	22	8-15	80	198	145	110	165	7	10	130	18	M8	47	22	8	25	3	0.9	1.5	47	47
250	180	215	4	18	4-15	55	170	145	110	165	7	8	130	15	M8	49	22	8	25	3	0.45	0.81	26	26
300	230	265	5	22	8-15	80	198	145	110	165	7	10	130	18	M8	47	22	8	25	3	0.9	1.5	47	47
400	300	350	8	25	8-19	110	231	145	110	250	7	8	—	22	M8	49	22	8	25	4	1.8	2.4	112	106
250	180	215	4	18	4-15	55	170	145	110	165	7	10	—	18	M8	57	24	8	27	4	0.45	0.81	28	28
300	230	265	5	22	8-15	80	198	145	110	200	7	10	—	15	M8	57	24	8	27	4	0.9	1.5	51	51
400	300	350	8	25	8-19	110	231	145	110	250	7	8	—	22	M8	59	24	8	27	4	1.8	2.4	112	106
250	180	215	4	18	4-15	55	170	145	110	165	7	10	—	18	M8	57	24	8	27	4	0.45	0.81	28	28
300	230	265	5	22	8-15	80	198	145	110	200	7	10	—	15	M8	57	24	8	27	4	0.9	1.5	51	51
400	300	350	8	25	8-19	110	231	145	110	250	7	8	—	22	M8	59	24	8	27	4	1.8	2.4	112	106
250	180	215	4	18	4-15	55	170	165	130	200	7	7	—	22	M10	60	28	8	31	4	0.45	0.81	31	31
300	230	265	5	22	8-15	80	198	165	130	233	7	7	176	18	M10	60	28	8	31	3	0.9	1.5	51	51
400	300	350	8	25	8-19	110	231	165	130	233	7	7	176	18	M10	60	28	8	31	3	1.8	2.4	102	96
250	180	215	4	18	4-15	55	170	165	130	200	7	7	—	22	M10	60	28	8	31	4	0.45	0.81	31	31
300	230	265	5	22	8-15	80	198	165	130	233	7	7	176	18	M10	60	28	8	31	3	0.9	1.5	51	51
400	300	350	8	25	8-19	110	231	165	130	233	7	7	176	18	M10	60	28	8	31	3	1.8	2.4	102	96
300	230	265	5	22	8-15	80	198	200	114.3	233	7	11	176	18	M12	61	35	10	38	3	0.9	1.5	50	50
400	300	350	8	25	8-19	110	231	200	114.3	233	7	6	176	18	M12	66	35	10	38	3	1.8	2.4	102	96
300	230	265	5	22	8-15	80	198	200	114.3	233	7	11	176	18	M12	61	35	10	38	3	0.9	1.5	50	50
400	300	350	8	25	8-19	110	231	200	114.3	233	7	6	176	18	M12	66	35	10	38	3	1.8	2.4	102	96

■ Input speed 3000rpm

ERK type (base-combined horizontal type)

M~C types

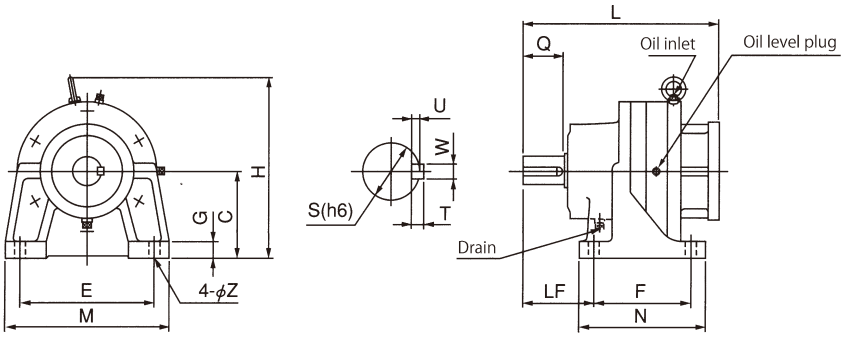

Figure-1

D, types

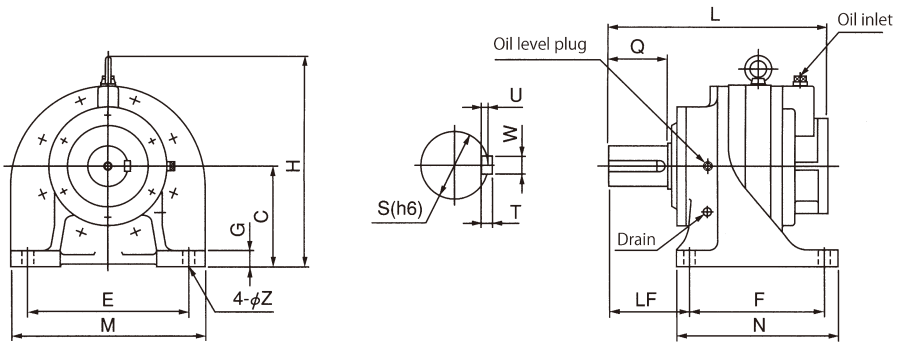

Applicable servo motor type	Motor cap. (kW)	Reducer model	Reducer type no.			Length	Output shaft end					Height		Horizontal base Figure-1 Base						
				NB	Standard	L	Q	S	W×U	T	TA	H	C	N	F	LF	M	E	G	Z
MSMA012	0.1	ERK-	M	○	○	159	25	14	5×3	5	—	110	60	75	55	45	110	90	9	9
MSMA022	0.2	ERK-	M	○	○	149	25	14	5×3	5	—	110	60	75	55	45	110	90	9	9
MSMA042	0.4	ERK-	B	○	○	213	40	28	8×4	7	—	196	90	135	105	75	175	145	16	12
MSMA082	0.75	ERK-	B	○	○	223	40	28	8×4	7	—	196	90	135	105	75	175	145	16	12
			C	○	○	264	55	38	10×5	8	—	241	115	170	130	95	220	180	22	15
MSMA102	1.0	ERK-	B	○	○	223	40	28	8×4	7	—	196	90	135	105	75	175	145	16	12
			C	○	○	271	55	38	10×5	8	—	241	115	170	130	95	220	180	22	15
MSMA152	1.5	ERK-	B	—	○	223	40	28	8×4	7	—	221	115	135	105	75	175	145	16	12
			C	○	○	264	55	38	10×5	8	—	241	115	170	130	95	220	180	22	15
			D	○	○	339	80	55	16×6	10	—	299	140	200	150	120	275	225	26	19
MSMA202	2.0	ERK-	B	—	○	223	40	28	8×4	7	—	221	115	135	105	75	175	145	16	12
			C	○	○	264	55	38	10×5	8	—	241	115	170	130	95	220	180	22	15
			D	○	○	339	80	55	16×6	10	—	299	140	200	150	120	275	225	26	19
MSMA252	2.5	ERK-	C	○	○	264	55	38	10×5	8	—	241	115	170	130	95	220	180	22	15
			D	○	○	339	80	55	16×6	10	—	299	140	200	150	120	275	225	26	19
MSMA302	3.0	ERK-	C	○	○	264	55	38	10×5	8	—	241	115	170	130	95	220	180	22	15
			D	○	○	334	80	55	16×6	10	—	299	140	200	150	120	275	225	26	19
MSMA352	3.5	ERK-	C	—	○	264	55	38	10×5	8	—	241	115	170	130	95	220	180	22	15
			D	○	○	334	80	55	16×6	10	—	299	140	200	150	120	275	225	26	19
MSMA402	4.0	ERK-	C	—	○	279	55	38	10×5	8	—	266	140	170	130	95	220	180	22	15
			D	○	○	339	80	55	16×6	10	—	299	140	200	150	120	275	225	26	19
MSMA452	4.5	ERK-	C	—	○	279	55	38	10×5	8	—	266	140	170	130	95	220	180	22	15
			D	○	○	339	80	55	16×6	10	—	299	140	200	150	120	275	225	26	19
MSMA502	5.0	ERK-	C	—	○	279	55	38	10×5	8	—	266	140	170	130	95	220	180	22	15
			D	○	○	339	80	55	16×6	10	—	299	140	200	150	120	275	225	26	19

Motor-combined flange

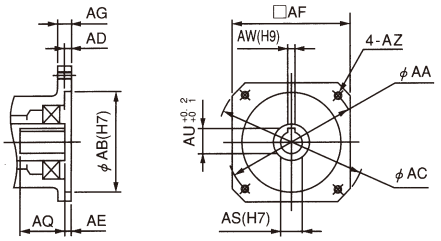

Figure-3

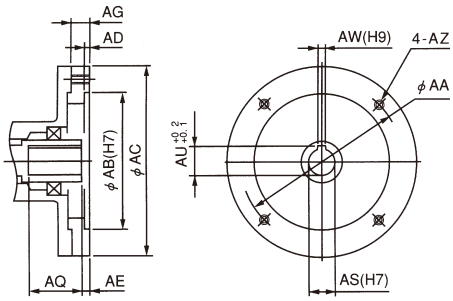

Figure-4

ERK-V type (flange-combined standing type)

M~C types

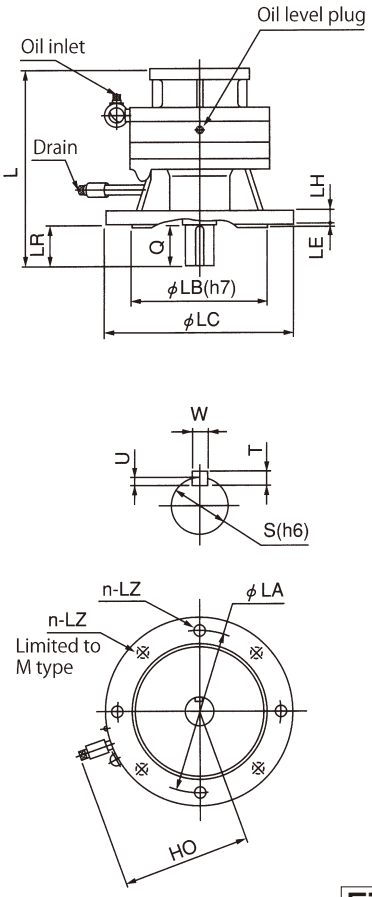

D, types

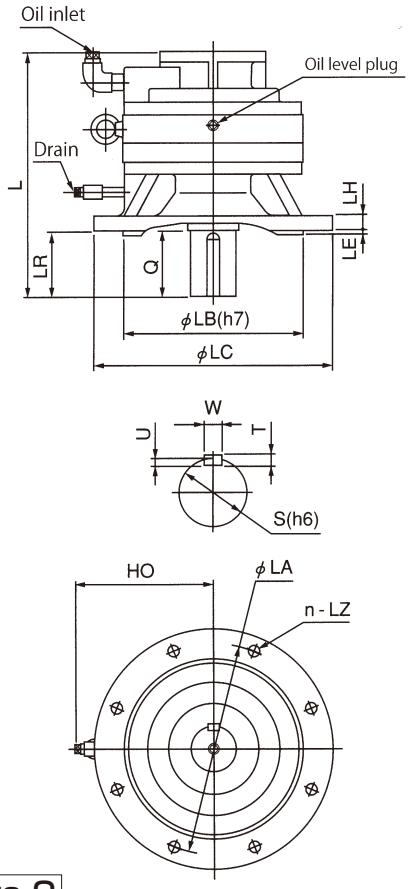

Figure-2

Standing flange Figure-2																								
Flange								Defective motor flange												Illst. no.	Flow(ℓ)		Weight(kg)	
LC	LB	LA	LE	LH	n-LZ	LR	HO	AA	AB	AC	AD	AE	AF	AG	AZ	AQ	AS	AW	AU		Horizontal	Standing	Horizontal	Standing
100	70	85	4	8	4-7	25	-	45	30	80	5	5	60	10	M3	22	8	3	9.2	3	Grease	Grease	4	4
100	70	85	4	8	4-7	25	-	70	50	110	5	7	80	10	M4	25	11	4	12.5	3	Grease	Grease	3	3
200	130	165	4	14	4-12	40	132	70	50	120	5	5	—	10	M4	27	14	5	16	4	0.22	0.4	13	13
200	130	165	4	14	4-12	40	132	90	70	135	5	5	100	15	M5	32	19	6	21.5	3	0.22	0.4	14	14
250	180	215	4	18	4-15	55	170	90	70	160	7	7	—	15	M5	30	19	6	21.5	4	0.45	0.81	26	26
200	130	165	4	14	4-12	40	132	100	80	135	5	7	100	15	M6	50	19	6	21.5	3	0.22	0.4	14	14
250	180	215	4	18	4-15	55	170	100	80	120	5	7	—	22	M6	50	19	6	21.5	4	0.45	0.81	26	26
200	130	165	4	14	4-12	40	132	115	95	135	5	7	100	15	M8	50	19	6	21.5	3	0.22	0.4	14	14
250	180	215	4	18	4-15	55	170	115	95	165	7	7	130	15	M8	50	19	6	21.5	3	0.45	0.81	26	26
300	230	265	5	22	8-15	80	198	115	95	200	5	7	—	15	M8	50	19	6	21.5	4	0.9	1.5	49	49
200	130	165	4	14	4-12	40	132	115	95	135	5	7	100	15	M8	50	19	6	21.5	3	0.22	0.4	14	14
250	180	215	4	18	4-15	55	170	115	95	165	7	7	130	15	M8	50	19	6	21.5	3	0.45	0.81	26	26
300	230	265	5	22	8-15	80	198	115	95	200	5	7	—	15	M8	50	19	6	21.5	4	0.9	1.5	49	49
250	180	215	4	18	4-15	55	170	115	95	165	7	7	130	15	M8	50	19	6	21.5	3	0.45	0.81	26	26
300	230	265	5	22	8-15	80	198	115	95	200	5	7	—	15	M8	50	19	6	21.5	4	0.9	1.5	49	49
250	180	215	4	18	4-15	55	170	145	110	165	7	8	130	15	M8	49	22	8	25	3	0.45	0.81	26	26
300	230	265	5	22	8-15	80	198	145	110	165	7	10	130	18	M8	47	22	8	25	3	0.9	1.5	47	47
250	180	215	4	18	4-15	55	170	145	110	165	7	8	130	15	M8	49	22	8	25	3	0.45	0.81	26	26
300	230	265	5	22	8-15	80	198	145	110	165	7	10	130	18	M8	47	22	8	25	3	0.9	1.5	47	47
250	180	215	4	18	4-15	55	170	145	110	165	7	10	—	18	M8	57	24	8	27	4	0.45	0.81	28	28
300	230	265	5	22	8-15	80	198	145	110	200	7	10	—	15	M8	57	24	8	27	4	0.9	1.5	51	51
250	180	215	4	18	4-15	55	170	145	110	165	7	10	—	18	M8	57	24	8	27	4	0.45	0.81	28	28
300	230	265	5	22	8-15	80	198	145	110	200	7	10	—	15	M8	57	24	8	27	4	0.9	1.5	51	51
250	180	215	4	18	4-15	55	170	145	110	165	7	10	—	18	M8	57	24	8	27	4	0.45	0.81	28	28
300	230	265	5	22	8-15	80	198	145	110	200	7	10	—	15	M8	57	24	8	27	4	0.9	1.5	51	51

■ Input speed 1000rpm

ERK type (base-combined horizontal type)

A~C types

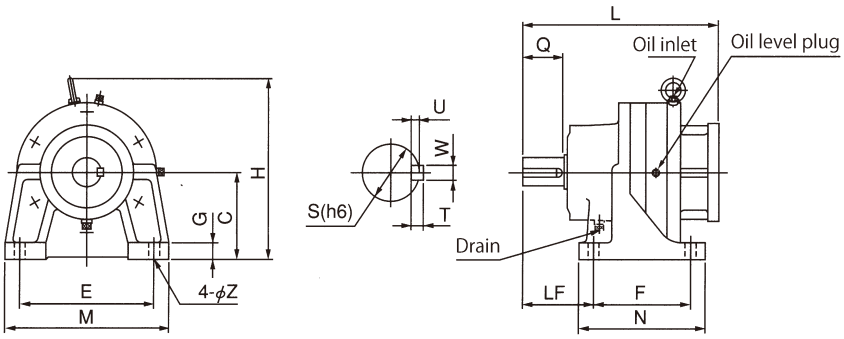

Figure-1

D, NE types

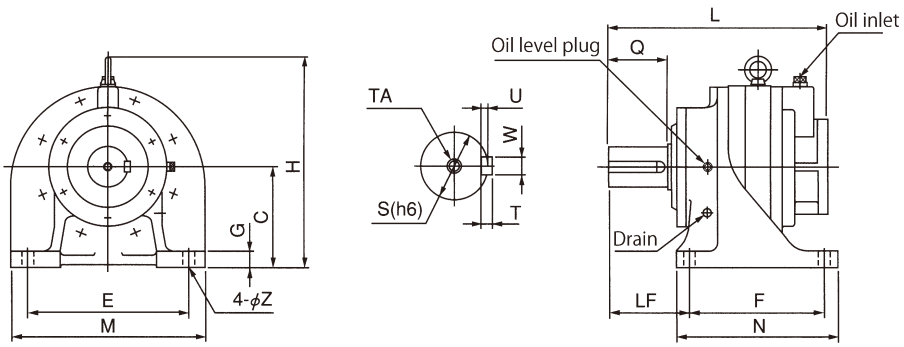

Applicable servo motor type	Motor cap. (kW)	Reducer model	Reducer type no.			Length	Output shaft end					Height		Horizontal base Figure-1 Base						
				NB	Standard	L	Q	S	W×U	T	TA	H	C	N	F	LF	M	E	G	Z
HC-SFS81K	0.85	ERK-	B	—	○	223	40	28	8×4	7	—	221	115	135	105	75	175	145	16	12
			C	○	○	264	55	38	10×5	8	—	241	115	170	130	95	220	180	22	15
			D	○	○	334	80	55	16×6	10	—	299	140	200	150	120	275	225	26	19
			NE	○	—	410	110	75	20×7.5	12	M16 depth 30	399	185	300	250	150	360	300	30	22
HC-SFS121K	1.2	ERK-	C	○	○	299	55	38	10×5	8	—	266	140	170	130	95	220	180	22	15
			D	○	○	364	80	55	16×6	10	—	299	140	200	150	120	275	225	26	19
			NE	○	—	408	110	75	20×7.5	12	M16 depth 30	399	185	300	250	150	360	300	30	22
HC-SFS201K	2.0	ERK-	C	—	○	299	55	38	10×5	8	—	266	140	170	130	95	220	180	22	15
			D	○	○	364	80	55	16×6	10	—	299	140	200	150	120	275	225	26	19
			NE	○	○	408	110	75	20×7.5	12	M16 depth 30	399	185	300	250	150	360	300	30	22
			NF	○	—	542	140	95	25×9	14	M16 depth 30	454	210	365	295	195	425	350	35	25
HC-SFS301K	3.0	ERK-	D	—	○	364	80	55	16×6	10	—	299	140	200	150	120	275	225	26	19
			NE	○	○	408	110	75	20×7.5	12	M16 depth 30	399	185	300	250	150	360	300	30	22
			NF	○	○	542	140	95	25×9	14	M16 depth 30	454	210	365	295	195	425	350	35	25

Motor-combined flange

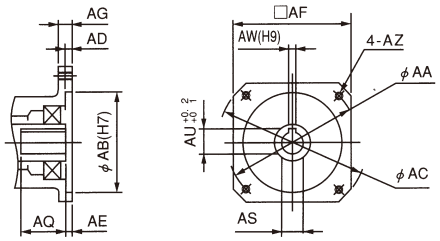

Figure-3

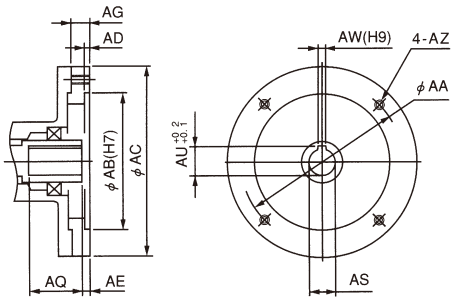

Figure-4

ERK-V type (flange-combined standing type)

A~C types

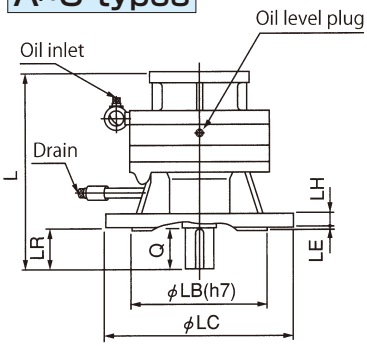

D, NE types

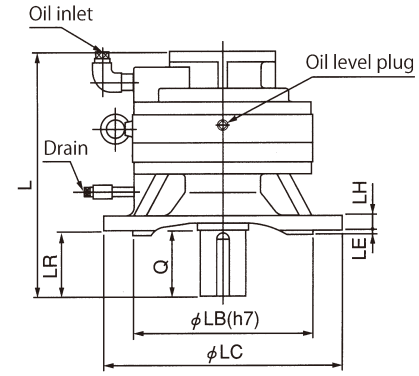

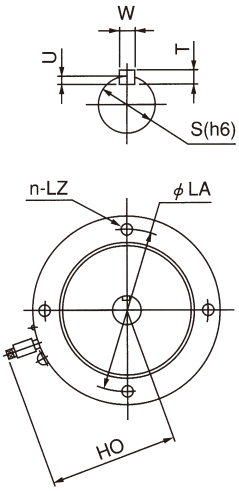

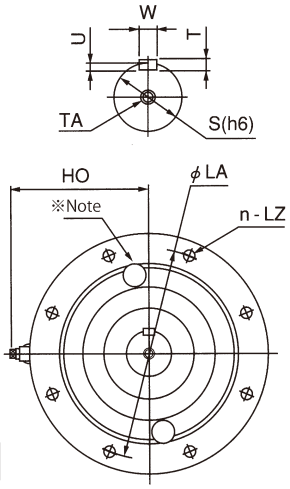

Figure-2

※Note : The NE · NF type of no-backlash specification includes a hole.

Standing flange Figure-2																								
Flange								Defective motor flange												Illst. no.	Flow(ℓ)		Weight(kg)	
LC	LB	LA	LE	LH	n-LZ	LR	HO	AA	AB	AC	AD	AE	AF	AG	AZ	AQ	AS	AW	AU		Horizontal	Standing	Horizontal	Standing
200	130	165	4	14	4-12	40	132	145	110	165	7	7	130	15	M8	50	24H7	8	27	3	0.22	0.4	14	14
250	180	215	4	18	4-15	55	170	145	110	165	7	7	130	15	M8	50	24G7	8	27	3	0.45	0.81	26	26
300	230	265	5	22	8-15	80	198	145	110	165	7	7	130	18	M8	50	24G7	8	27	3	0.9	1.5	47	47
400	300	350	8	25	8-19	110	231	145	110	250	7	7	—	22	M8	50	24H7	8	27	4	1.8	2.4	112	106
250	180	215	4	18	4-15	55	170	200	114.3	233	7	11	176	18	M12	71	35G7	10	38	3	0.45	0.81	30	30
300	230	265	5	22	8-15	80	198	200	114.3	233	7	11	176	18	M12	71	35G7	10	38	3	0.9	1.5	50	50
400	300	350	8	25	8-19	110	231	200	114.3	233	7	11	176	18	M12	71	35G7	10	38	3	1.8	2.4	102	96
250	180	215	4	18	4-15	55	170	200	114.3	233	7	11	176	18	M12	71	35G7	10	38	3	0.45	0.81	30	30
300	230	265	5	22	8-15	80	198	200	114.3	233	7	11	176	18	M12	71	35G7	10	38	3	0.9	1.5	50	50
400	300	350	8	25	8-19	110	231	200	114.3	233	7	11	176	18	M12	71	35G7	10	38	3	1.8	2.4	102	96
450	350	400	8	25	8-19	140	261	200	114.3	300	10	11	—	30	M12	71	35G7	10	38	4	3.2	4.3	203	190
300	230	265	5	22	8-15	80	198	200	114.3	233	7	11	176	18	M12	71	35G7	10	38	3	0.9	1.5	50	50
400	300	350	8	25	8-19	110	231	200	114.3	233	7	11	176	18	M12	71	35G7	10	38	3	1.8	2.4	102	96
450	350	400	8	25	8-19	140	261	200	114.3	300	10	11	—	30	M12	71	35G7	10	38	4	3.2	4.3	203	190

■ Input speed 2000rpm

ERK type (base-combined horizontal type)

A~C types

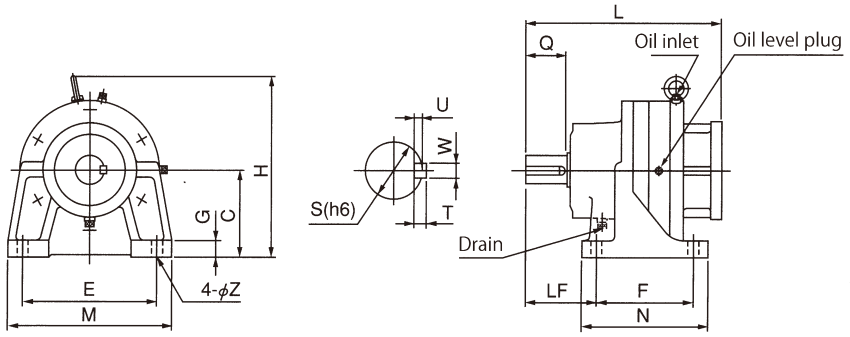

Figure-1

D, NE types

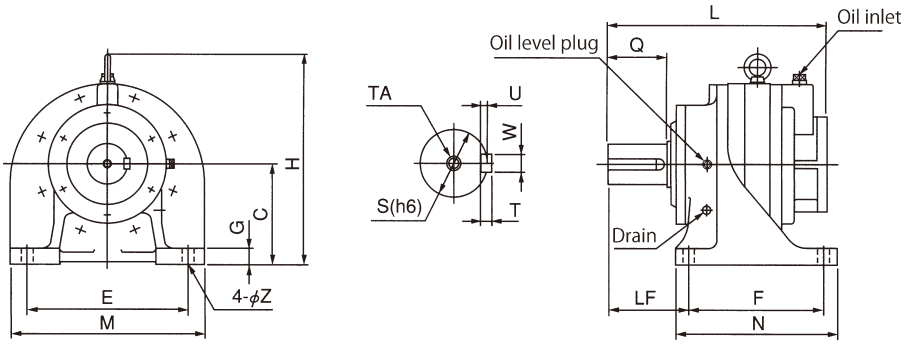

Applicable servo motor type	Motor cap. (kW)	Reducer model	Reducer type no.			Length	Output shaft end					Height		Horizontal base Figure-1 Base						
				NB	Standard	L	Q	S	W×U	T	TA	H	C	N	F	LF	M	E	G	Z
HC-SFS52K	0.5	ERK-	A	—	○	195	30	22	6×3.5	6	—	196	90	120	90	65	175	145	16	12
			B	○	○	223	40	28	8×4	7	—	221	115	135	105	75	175	145	16	12
			C	○	○	264	55	38	10×5	8	—	241	115	170	130	95	220	180	22	15
HC-SFS102K	1.0	ERK-	B	○	○	223	40	28	8×4	7	—	221	115	135	105	75	175	145	16	12
			C	○	○	264	55	38	10×5	8	—	241	115	170	130	95	220	180	22	15
			D	○	○	334	80	55	16×6	10	—	299	140	200	150	120	275	225	26	19
HC-SFS152K	1.5	ERK-	B	—	○	223	40	28	8×4	7	—	221	115	135	105	75	175	145	16	12
			C	○	○	264	55	38	10×5	8	—	241	115	170	130	95	220	180	22	15
			D	○	○	334	80	55	16×6	10	—	299	140	200	150	120	275	225	26	19
			NE	○	—	410	110	75	20×7.5	12	M16 depth 30	399	185	300	250	150	360	300	30	22
HC-SFS202K	2.0	ERK-	C	○	○	299	55	38	10×5	8	—	266	140	170	130	95	220	180	22	15
			D	○	○	364	80	55	16×6	10	—	299	140	200	150	120	275	225	26	19
			NE	○	—	408	110	75	20×7.5	12	M16 depth 30	399	185	300	250	150	360	300	30	22
HC-SFS352K	3.5	ERK-	C	—	○	299	55	38	10×5	8	—	266	140	170	130	95	220	180	22	15
			D	○	○	364	80	55	16×6	10	—	299	140	200	150	120	275	225	26	19
			NE	○	○	408	110	75	20×7.5	12	M16 depth 30	399	185	300	250	150	360	300	30	22
HC-SFS502K	5.0	ERK-	D	—	○	364	80	55	16×6	10	—	299	140	200	150	120	275	225	26	19
			NE	○	○	408	110	75	20×7.5	12	M16 depth 30	399	185	300	250	150	360	300	30	22
			NF	○	○	542	140	95	25×9	14	M16 depth 30	454	210	365	295	195	425	350	35	25
HC-SFS702K	7.0	ERK-	D	—	○	364	80	55	16×6	10	—	299	140	200	150	120	275	225	26	19
			NE	○	○	408	110	75	20×7.5	12	M16 depth 30	399	185	300	250	150	360	300	30	22
			NF	○	○	542	140	95	25×9	14	M16 depth 30	454	210	365	295	195	425	350	35	25

Motor-combined flange

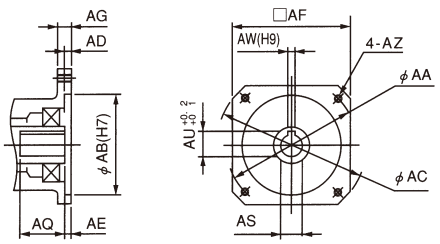

Figure-3

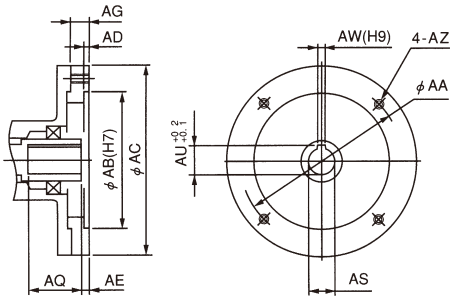

Figure-4

ERK-V type (flange-combined standing type)

A~C types

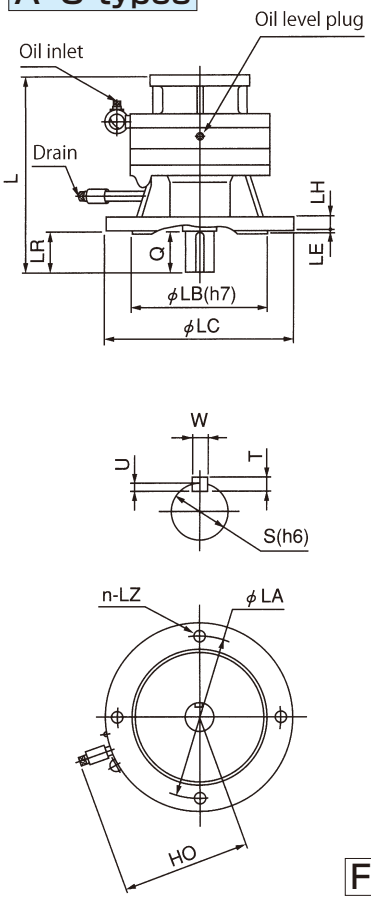

D, NE types

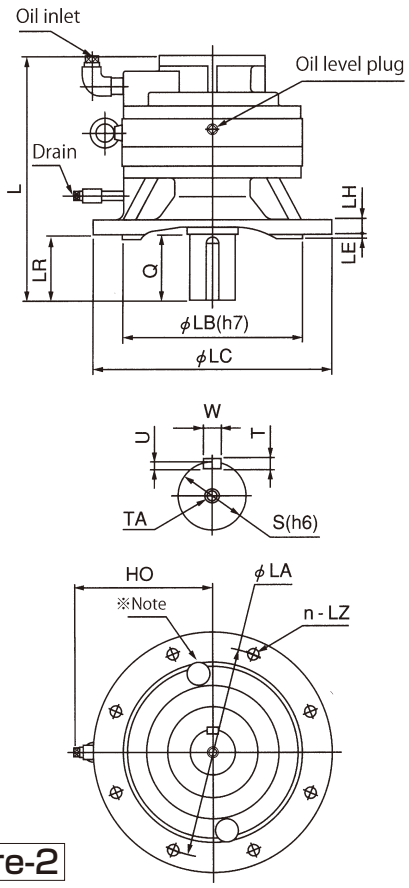

Figure-2

※Note : The NE · NF type of no-backlash specification includes a hole.

Standing flange Figure-2																								
Flange								Defective motor flange												Illust. no.	Flow(ℓ)		Weight(kg)	
LC	LB	LA	LE	LH	n-LZ	LR	HO	AA	AB	AC	AD	AE	AF	AG	AZ	AQ	AS	AW	AU		Horizontal	Standing	Horizontal	Standing
160	110	130	4	14	4-12	30	114	145	110	165	7	7	130	15	M8	50	24H7	8	27	3	0.16	0.29	12	12
200	130	165	4	14	4-12	40	132	145	110	165	7	7	130	15	M8	50	24H7	8	27	3	0.22	0.4	14	14
250	180	215	4	18	4-15	55	170	145	110	165	7	7	130	15	M8	50	24G7	8	27	3	0.45	0.81	26	26
200	130	165	4	14	4-12	40	132	145	110	165	7	7	130	15	M8	50	24H7	8	27	3	0.22	0.4	14	14
250	180	215	4	18	4-15	55	170	145	110	165	7	7	130	15	M8	50	24G7	8	27	3	0.45	0.81	26	26
300	230	265	5	22	8-15	80	198	145	110	165	7	7	130	18	M8	50	24G7	8	27	3	0.9	1.5	47	47
200	130	165	4	14	4-12	40	132	145	110	165	7	7	130	15	M8	50	24H7	8	27	3	0.22	0.4	14	14
250	180	215	4	18	4-15	55	170	145	110	165	7	7	130	15	M8	50	24G7	8	27	3	0.45	0.81	26	26
300	230	265	5	22	8-15	80	198	145	110	165	7	7	130	18	M8	50	24G7	8	27	3	0.9	1.5	47	47
400	300	350	8	25	8-19	110	231	145	110	250	7	7	—	22	M8	50	24H7	8	27	4	1.8	2.4	112	106
250	180	215	4	18	4-15	55	170	200	114.3	233	7	11	176	18	M12	71	35G7	10	38	3	0.45	0.81	30	30
300	230	265	5	22	8-15	80	198	200	114.3	233	7	11	176	18	M12	71	35G7	10	38	3	0.9	1.5	50	50
400	300	350	8	25	8-19	110	231	200	114.3	233	7	11	176	18	M12	71	35G7	10	38	3	1.8	2.4	102	96
250	180	215	4	18	4-15	55	170	200	114.3	233	7	11	176	18	M12	71	35G7	10	38	3	0.45	0.81	30	30
300	230	265	5	22	8-15	80	198	200	114.3	233	7	11	176	18	M12	71	35G7	10	38	3	0.9	1.5	50	50
400	300	350	8	25	8-19	110	231	200	114.3	233	7	11	176	18	M12	71	35G7	10	38	3	1.8	2.4	102	96
300	230	265	5	22	8-15	80	198	200	114.3	233	7	11	176	18	M12	71	35G7	10	38	3	0.9	1.5	50	50
400	300	350	8	25	8-19	110	231	200	114.3	233	7	11	176	18	M12	71	35G7	10	38	3	1.8	2.4	102	96
450	350	400	8	25	8-19	140	261	200	114.3	300	10	11	-	30	M12	71	35G7	10	38	4	3.2	4.3	203	190
300	230	265	5	22	8-15	80	148	200	114.3	233	7	11	176	18	M12	71	35G7	10	38	3	0.9	1.5	50	50
400	300	350	8	25	8-19	110	110	200	114.3	233	7	11	176	18	M12	71	35G7	10	38	3	1.8	2.4	102	96
450	350	400	8	25	8-19	140	140	200	114.3	300	10	11	-	30	M12	71	35G7	10	38	4	3.2	4.3	203	190

■ Input speed 3000rpm

ERK type (base-combined horizontal type)

A~C types

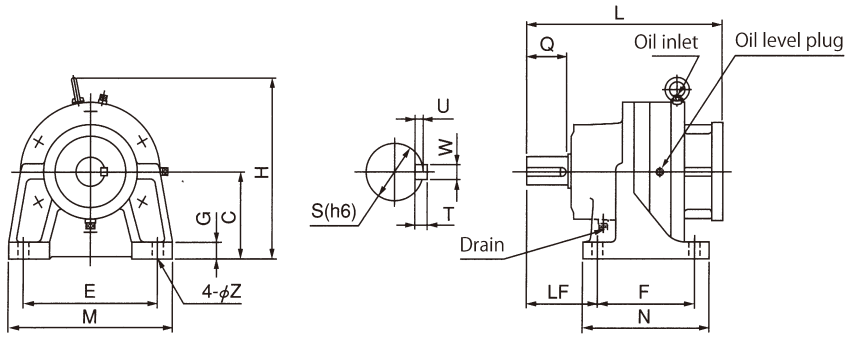

Figure-1

D type

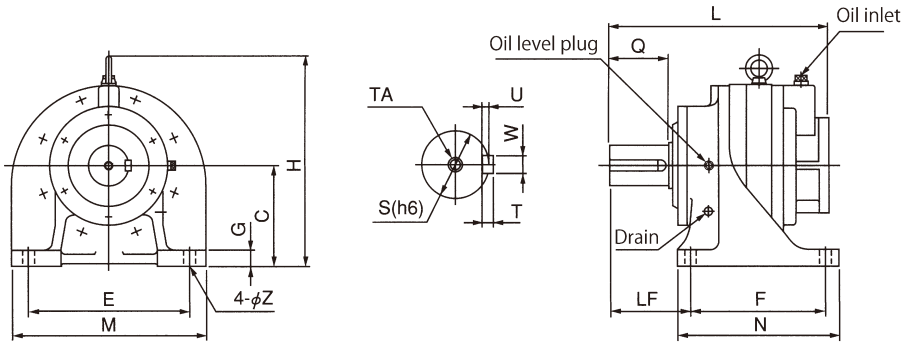

Applicable servo motor type	Motor cap. (kW)	Reducer model	Reducer type no.			Length	Output shaft end					Height		Horizontal base Figure-1 Base						
				NB	Standard	L	Q	S	W×U	T	TA	H	C	N	F	LF	M	E	G	Z
HC-SFS53K	0.5	ERK-	B	○	○	223	40	28	8×4	7	—	221	115	135	105	75	175	145	16	12
HC-SFS103K	1.0	ERK-	B	○	○	223	40	28	8×4	7	—	221	115	135	105	75	175	145	16	12
			C	○	○	264	55	38	10×5	8	—	241	115	170	130	95	220	180	22	15
HC-SFS153K	1.5	ERK-	B	—	○	223	40	28	8×4	7	—	221	115	135	105	75	175	145	16	12
			C	○	○	264	55	38	10×5	8	—	241	115	170	130	95	220	180	22	15
			D	○	○	334	80	55	16×6	10	—	299	140	200	150	120	275	225	26	19
HC-SFS203K	2.0	ERK-	B	—	○	263	40	28	8×4	7	—	221	115	135	105	75	175	145	16	12
			C	○	○	299	55	38	10×5	8	—	266	140	170	130	95	220	180	22	15
			D	○	○	364	80	55	16×6	10	—	299	140	200	150	120	275	225	26	19
HC-SFS353K	3.5	ERK-	C	—	○	299	55	38	10×5	8	—	266	140	170	130	95	220	180	22	15
			D	○	○	364	80	55	16×6	10	—	299	140	200	150	120	275	225	26	19

Motor-combined flange

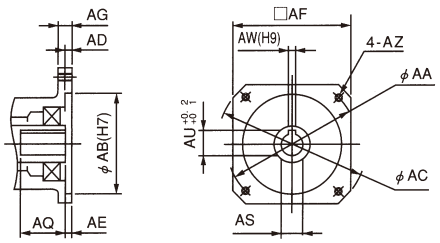

Figure-3

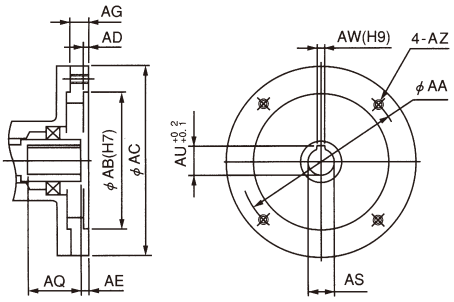

Figure-4

ERK-V type (flange-combined standing type)

A~C types

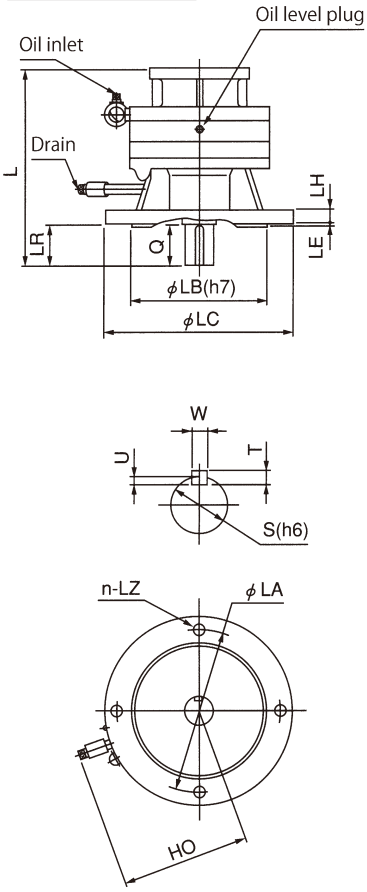

D type

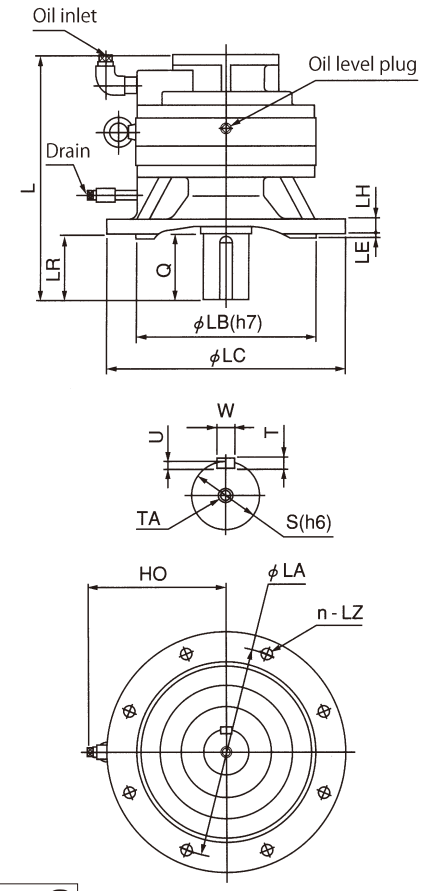

Figure-2

Standing flange Figure-2																								
Flange								Defective motor flange												Illust. no.	Flow(ℓ)		Weight(kg)	
LC	LB	LA	LE	LH	n-LZ	LR	HO	AA	AB	AC	AD	AE	AF	AG	AZ	AQ	AS	AW	AU		Horizontal	Standing	Horizontal	Standing
200	130	165	4	14	4-12	40	132	145	110	165	7	7	130	15	M8	50	24H7	8	27	3	0.22	0.4	14	14
200	130	165	4	14	4-12	40	132	145	110	165	7	7	130	15	M8	50	24H7	8	27	3	0.22	0.4	14	14
250	180	215	4	18	4-15	55	170	145	110	165	7	7	130	15	M8	50	24G7	8	27	3	0.45	0.81	26	26
200	130	165	4	14	4-12	40	132	145	110	165	7	7	130	15	M8	50	24H7	8	27	3	0.22	0.4	14	14
250	180	215	4	18	4-15	55	170	145	110	165	7	7	130	15	M8	50	24G7	8	27	3	0.45	0.81	26	26
300	230	265	5	22	8-15	80	198	145	110	165	7	7	130	18	M8	50	24G7	8	27	3	0.9	1.5	47	47
200	130	165	4	14	4-12	40	132	200	114.3	230	5	7	180	15	M12	75	35G7	10	38	3	0.22	0.4	20	20
250	180	215	4	18	4-15	55	170	200	114.3	233	7	11	176	18	M12	71	35G7	10	38	3	0.45	0.81	30	30
300	230	265	5	22	8-15	80	198	200	114.3	233	7	11	176	18	M12	71	35G7	10	38	3	0.9	1.5	50	50
250	180	215	4	18	4-15	55	170	200	114.3	233	7	11	176	18	M12	71	35G7	10	38	3	0.45	0.81	30	30
300	230	265	5	22	8-15	80	198	200	114.3	233	7	11	176	18	M12	71	35G7	10	38	3	0.9	1.5	50	50

■ Input speed 2000rpm

ERK type (base-combined horizontal type)

B, C types

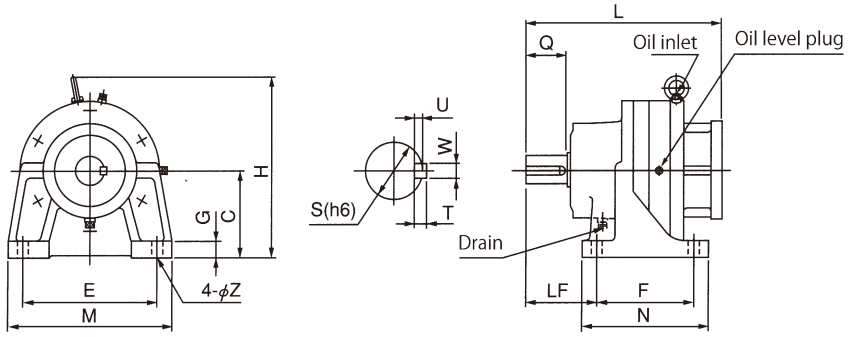

Figure-1

D, NE types

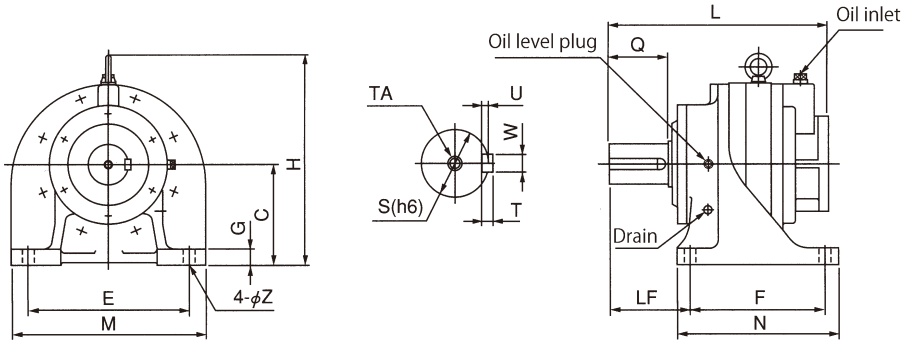

Applicable servo motor type	Motor cap. (kW)	Reducer model	Reducer type no.			Length	Output shaft end					Height		Horizontal base Figure-1 Base						
				NB	Standard	L	Q	S	W×U	T	TA	H	C	N	F	LF	M	E	G	Z
NA100-40F	0.8	ERK-	B	○	○	223	40	28	8×4	7	—	221	115	135	105	75	175	145	16	12
			C	○	○	264	55	38	10×5	8	—	241	115	170	130	95	220	180	22	15
NA100-75F	1.5	ERK-	B	—	○	223	40	28	8×4	7	—	221	115	135	105	75	175	145	16	12
			C	○	○	264	55	38	10×5	8	—	241	115	170	130	95	220	180	22	15
			D	○	○	334	80	55	16×6	10	—	299	140	200	150	120	275	225	26	19
NA100-110F	2.2	ERK-	C	○	○	279	55	38	10×5	8	—	266	140	170	130	95	220	180	22	15
			D	○	○	339	80	55	16×6	10	—	299	140	200	150	120	275	225	26	19
			NE	○	—	410	110	75	20×7.5	12	M16 depth 30	399	185	300	250	150	360	300	30	22
NA100-180F	3.7	ERK-	C	—	○	279	55	38	10×5	8	—	266	140	170	130	95	220	180	22	15
			D	○	○	364	80	55	16×6	10	—	299	140	200	150	120	275	225	26	19
			NE	○	○	408	110	75	20×7.5	12	M16 depth 30	399	185	300	250	150	360	300	30	22
NA100-270F	5.5	ERK-	D	—	○	384	80	55	16×6	10	—	324	165	200	150	120	275	225	26	19
			NE	○	○	460	110	75	20×7.5	12	M16 depth 30	399	185	300	250	150	360	300	30	22
			NF	—	○	534	140	95	25×9	14	M16 depth 30	454	210	365	295	195	425	350	35	25
NA100-370F	7.5	ERK-	D	—	○	384	80	55	16×6	10	—	324	165	200	150	120	275	225	26	19
			NE	○	○	460	110	75	20×7.5	12	M16 depth 30	399	185	300	250	150	360	300	30	22
			NF	○	○	534	140	95	25×9	14	M16 depth 30	454	210	365	295	195	425	350	35	25
NA100-550F	11	ERK-	NE	○	○	495	110	75	20×7.5	12	M16 depth 30	399	185	300	250	150	360	300	30	22
			NF	○	○	546	140	95	25×9	14	M16 depth 30	454	210	365	295	195	425	350	35	25
NA100-750F	15	ERK-	NE	—	○	515	110	75	20×7.5	12	M16 depth 30	399	185	300	250	150	360	300	30	22
			NF	○	○	565	140	95	25×9	14	M16 depth 30	454	210	365	295	195	425	350	35	25

Motor-combined flange

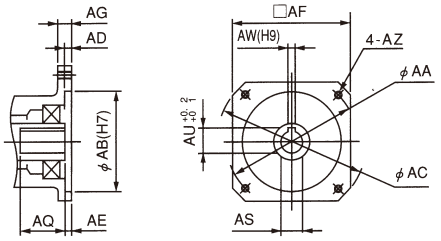

Figure-3

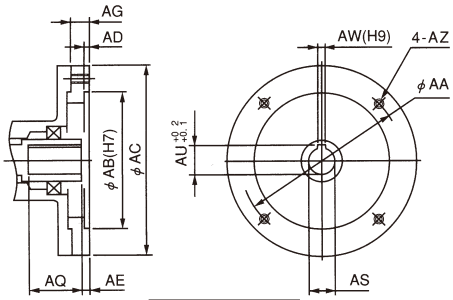

Figure-4

Note : Tolerance of AS in the figure is divided according to diameter of the shaft:
Ø24, Ø28 : G7
Ø38~Ø48 : F7

ERK-V type (flange-combined standing type)

B, C types

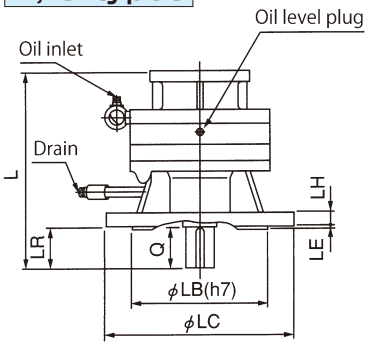

D, NF types

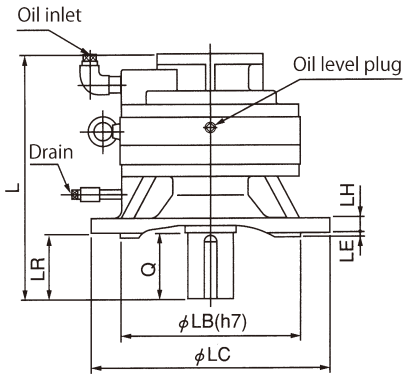

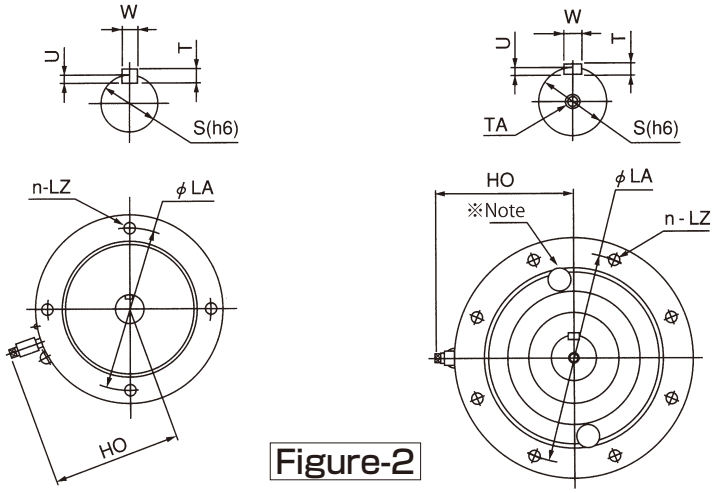

Figure-2

※Note : The NE · NF type of no-backlash specification includes a hole.

Standing flange Figure-2																								
Flange								Defective motor flange												Illust. no.	Flow(ℓ)		Weight(kg)	
LC	LB	LA	LE	LH	n-LZ	LR	HO	AA	AB	AC	AD	AE	AF	AG	AZ	AQ	AS	AW	AU		Horizontal	Standing	Horizontal	Standing
200	130	165	4	14	4-12	40	132	145	110	165	7	7	130	15	M8	50	24	8	27	3	0.22	0.4	14	14
250	180	215	4	18	4-15	55	170	145	110	165	7	7	130	15	M8	50	24	8	27	3	0.45	0.81	26	26
200	130	165	4	14	4-12	40	132	145	110	165	7	7	130	15	M8	50	24	8	27	3	0.22	0.4	14	14
250	180	215	4	18	4-15	55	170	145	110	165	7	7	130	15	M8	50	24	8	27	3	0.45	0.81	26	26
300	230	265	5	22	8-15	80	198	145	110	165	7	7	130	18	M8	50	24	8	27	3	0.9	1.5	47	47
250	180	215	4	18	4-15	55	170	145	110	165	7	10	—	18	M8	57	28	8	31	4	0.45	0.81	28	28
300	230	265	5	22	8-15	80	198	145	110	200	7	7	—	15	M8	60	28	8	31	4	0.9	1.5	51	51
400	300	350	8	25	8-19	110	231	145	110	250	7	7	—	22	M8	60	28	8	31	4	1.8	2.4	112	106
250	180	215	4	18	4-15	55	170	200	114.3	230	7	10	180	18	M12	57	28	8	31	3	0.45	0.81	28	28
300	230	265	5	22	8-15	80	198	200	114.3	233	7	7	176	18	M12	60	28	8	31	3	0.9	1.5	50	50
400	300	350	8	25	8-19	110	231	200	114.3	233	7	7	176	18	M12	60	28	8	31	3	1.8	2.4	102	96
300	230	265	5	22	8-15	80	198	215	180	300	10	26	—	22	M12	78	38	10	41	4	0.9	1.5	58	58
400	300	350	8	25	8-19	110	231	215	180	300	10	16	—	22	M12	75	38	10	41	4	1.8	2.4	117	112
450	350	400	8	25	8-19	140	261	215	180	300	10	8	—	22	M12	80	38	10	41	4	3.2	4.3	195	182
300	230	265	5	22	8-15	80	198	215	180	300	10	26	—	22	M12	78	38	10	41	4	0.9	1.5	58	58
400	300	350	8	25	8-19	110	231	215	180	300	10	16	—	22	M12	75	38	10	41	4	1.8	2.4	117	112
450	350	400	8	25	8-19	140	261	215	180	300	10	8	—	22	M12	80	38	10	41	4	3.2	4.3	195	182
400	300	350	8	25	8-19	110	231	235	200	350	7	37	—	22	M12	81	42	12	45	4	1.8	2.4	130	125
450	350	400	8	25	8-19	140	261	235	200	300	5	21	—	34	M12	98	42	12	45	4	3.2	4.3	208	195
400	300	350	8	25	8-19	110	231	265	230	350	6	8	—	42	M12	110	48	14	51.5	4	1.8	2.4	134	129
450	350	400	8	25	8-19	140	261	265	230	400	5	40	—	25	M12	79	48	14	51.5	4	3.2	4.3	220	207

■ Input speed 2000rpm

ERK type (base-combined horizontal type)

A~C types

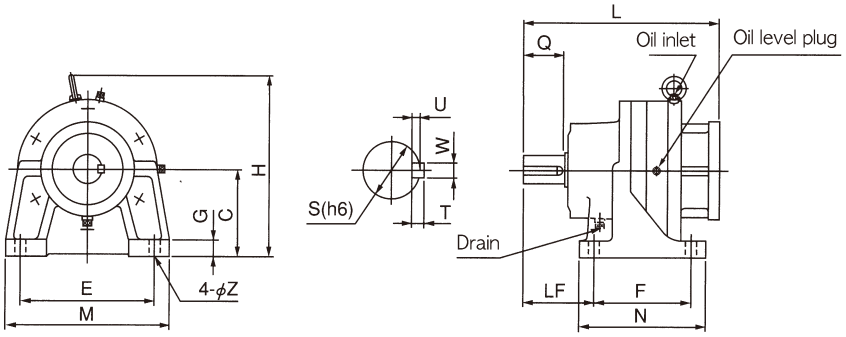

Figure-1

D, NE types

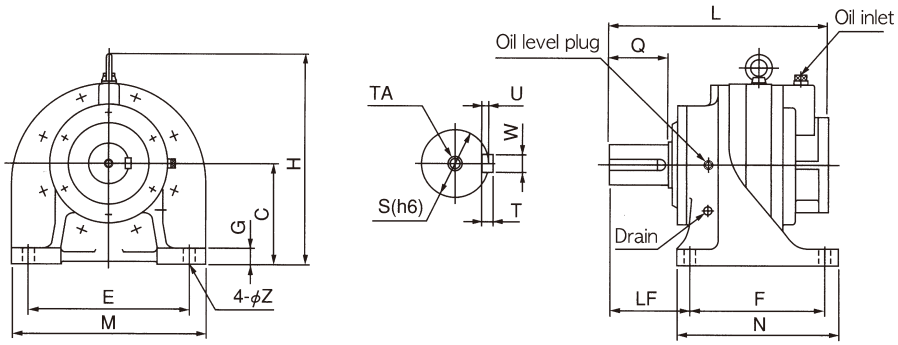

Applicable servo motor type	Motor cap. (kW)	Reducer model	Reducer type no.			Length	Output shaft end					Height		Horizontal base Figure-1 Base						
				NB	Standard	L	Q	S	W×U	T	TA	H	C	N	F	LF	M	E	G	Z
P60B13050	0.5	ERK-	A	—	○	191	30	22	6×3.5	6	—	196	90	120	90	65	175	145	16	12
			B	○	○	223	40	28	8×4	7	—	221	115	135	105	75	175	145	16	12
			C	○	○	264	55	38	10×5	8	—	241	115	170	130	95	220	180	22	15
P60B13100	1	ERK-	B	○	○	223	40	28	8×4	7	—	221	115	135	105	75	175	145	16	12
			C	○	○	264	55	38	10×5	8	—	241	115	170	130	95	220	180	22	15
			D	○	○	334	80	55	16×6	10	—	299	140	200	150	120	275	225	26	19
P60B13150	1.5	ERK-	B	—	○	223	40	28	8×4	7	—	221	115	135	105	75	175	145	16	12
			C	○	○	264	55	38	10×5	8	—	241	115	170	130	95	220	180	22	15
			D	○	○	334	80	55	16×6	10	—	299	140	200	150	120	275	225	26	19
P60B13200	2.0	ERK-	C	○	○	279	55	38	10×5	8	—	266	140	170	130	95	220	180	22	15
			D	○	○	339	80	55	16×6	10	—	299	140	200	150	120	275	225	26	19
			NE	○	—	410	110	75	20×7.5	12	M16 depth 30	399	185	300	250	150	360	300	30	22
P60B18200		ERK-	C	○	○	299	55	38	10×5	8	—	266	140	170	130	95	220	180	22	15
			D	○	○	364	80	55	16×6	10	—	299	140	200	150	120	275	225	26	19
			NE	○	—	408	110	75	20×7.5	12	M16 depth 30	399	185	300	250	150	360	300	30	22
P60B15300	3.0	ERK-	C	—	○	264	55	38	10×5	8	—	241	115	170	130	95	220	180	22	15
			D	○	○	324	80	55	16×6	10	—	299	140	200	150	120	275	225	26	19
			NE	○	○	408	110	75	20×7.5	12	M16 depth 30	399	185	300	250	150	360	300	30	22
P60B18350	3.5	ERK-	C	—	○	299	55	38	10×5	8	—	266	140	170	130	95	220	180	22	15
			D	○	○	364	80	55	16×6	10	—	299	140	200	150	120	275	225	26	19
			NE	○	○	408	110	75	20×7.5	12	M16 depth 30	399	185	300	250	150	360	300	30	22
P60B18450	4.5	ERK-	D	○	○	364	80	55	16×6	10	—	299	140	200	150	120	275	225	26	19
			NE	○	○	408	110	75	20×7.5	12	M16 depth 30	399	185	300	250	150	360	300	30	22

Motor-combined flange

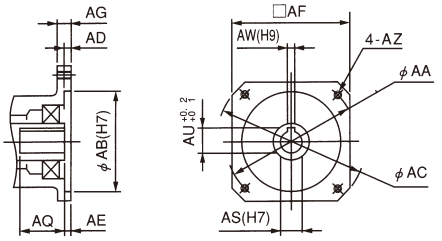

Figure-3

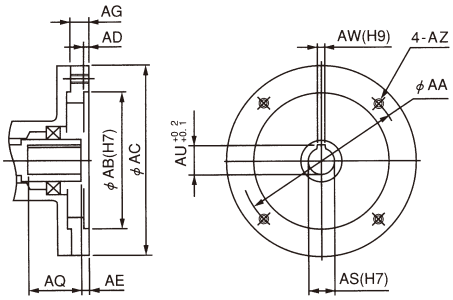

Figure-4

ERK-V type (flange-combined standing type)

A~C types

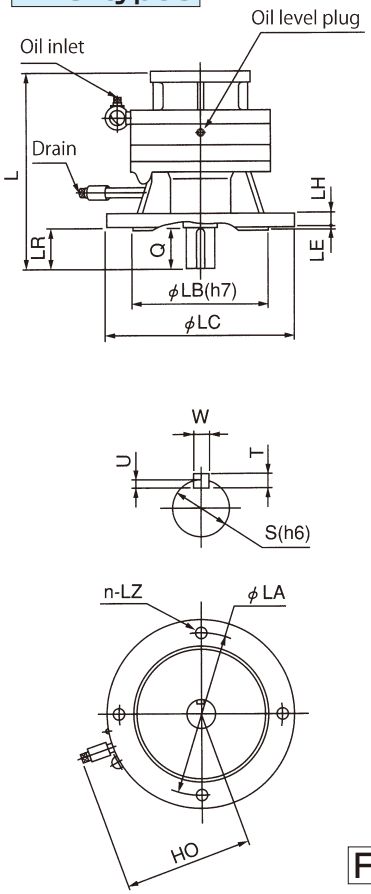

D, NE types

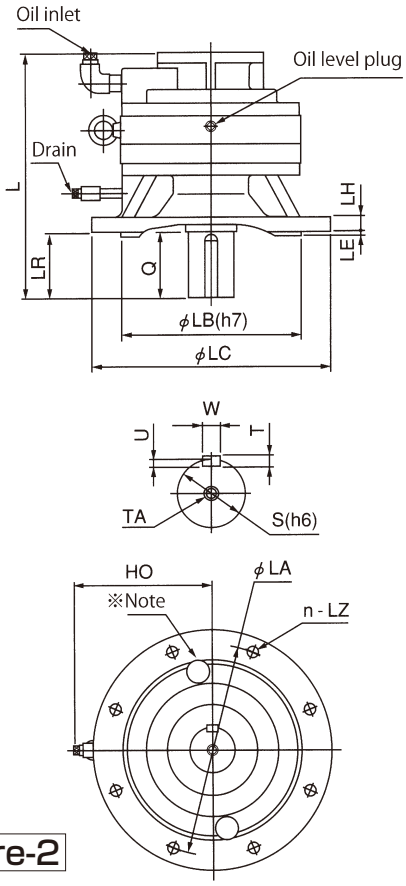

Figure-2

※Note : The NE · NF type of no-backlash specification includes a hole.

Standing flange Figure-2																								
Flange								Defective motor flange												Illust. no.	Flow(ℓ)		Weight(kg)	
LC	LB	LA	LE	LH	n-LZ	LR	HO	AA	AB	AC	AD	AE	AF	AG	AZ	AQ	AS	AW	AU		Horizontal	Standing	Horizontal	Standing
160	110	130	4	14	4-12	30	114	145	110	165	7	8	130	15	M8	49	22	6	24.5	3	0.16	0.29	12	12
200	130	165	4	14	4-12	40	132	145	110	165	7	8	130	15	M8	49	22	6	24.5	3	0.22	0.4	14	14
250	180	215	4	18	4-15	55	170	145	110	165	7	8	130	15	M8	49	22	6	24.5	3	0.45	0.81	26	26
200	130	165	4	14	4-12	40	132	145	110	165	7	8	130	15	M8	49	22	6	24.5	3	0.22	0.4	14	14
250	180	215	4	18	4-15	55	170	145	110	165	7	8	130	15	M8	49	22	6	24.5	3	0.45	0.81	26	26
300	230	265	5	22	8-15	80	198	145	110	165	7	8	130	18	M8	49	22	6	24.5	3	0.9	1.5	47	47
200	130	165	4	14	4-12	40	132	145	110	165	7	8	130	15	M8	49	22	6	24.5	3	0.22	0.4	14	14
250	180	215	4	18	4-15	55	170	145	110	165	7	8	130	15	M8	49	22	6	24.5	3	0.45	0.81	26	26
300	230	265	5	22	8-15	80	198	145	110	165	7	8	130	18	M8	49	22	6	24.5	3	0.9	1.5	47	47
250	180	215	4	18	4-15	55	170	145	110	165	7	7	—	18	M8	50	28	8	31	4	0.45	0.81	28	28
300	230	265	5	22	8-15	80	198	145	110	200	7	10	—	15	M8	49	28	8	31	4	0.9	1.5	51	51
400	300	350	8	25	8-19	110	231	145	110	250	7	7	—	22	M8	50	28	8	31	4	1.8	2.4	112	106
250	180	215	4	18	4-15	55	170	200	114.3	233	7	11	176	18	M12	56	35	10	38	3	0.45	0.81	30	30
300	230	265	5	22	8-15	80	198	200	114.3	233	7	11	176	18	M12	56	35	10	38	3	0.9	1.5	50	50
400	300	350	8	25	8-19	110	231	200	114.3	233	7	7	176	18	M12	60	35	10	38	3	1.8	2.4	102	96
250	180	215	4	18	4-15	55	170	165	130	200	5	7	—	15	M10	50	28	8	31	4	0.45	0.81	26	26
300	230	265	5	22	8-15	80	198	165	130	200	5	7	—	15	M10	50	28	8	31	4	0.9	1.5	46	46
400	300	350	8	25	8-19	110	231	165	130	233	7	7	176	18	M10	50	28	8	31	3	1.8	2.4	102	96
250	180	215	4	18	4-15	55	170	200	114.3	233	7	11	176	18	M12	56	35	10	38	3	0.45	0.81	30	30
300	230	265	5	22	8-15	80	198	200	114.3	233	7	11	176	18	M12	56	35	10	38	3	0.9	1.5	50	50
400	300	350	8	25	8-19	110	231	200	114.3	233	7	7	176	18	M12	60	35	10	38	3	1.8	2.4	102	96
300	230	265	5	22	8-15	80	198	200	114.3	233	7	11	176	18	M12	56	35	10	38	3	0.9	1.5	50	50
400	300	300	8	25	8-19	110	231	200	114.3	233	7	7	176	18	M12	60	35	10	38	3	1.8	2.4	102	96

■ Input speed 3000rpm

ERK type (base-combined horizontal type)

M~C types

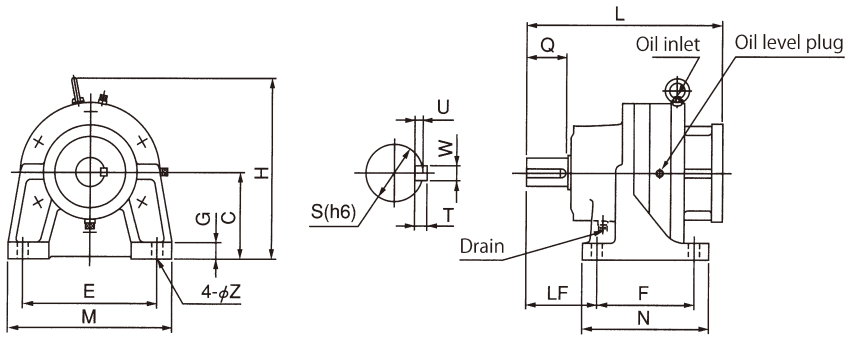

Figure-1

Applicable servo motor type	Motor cap. (kW)	Reducer model	Reducer type no.			Length	Output shaft end				Height		Horizontal base Figure-1 Base						
				NB	Standard	L	Q	S	W × U	T	H	C	N	F	LF	M	E	G	Z
P50B05010	0.1	ERK-	M	○	○	149	25	14	5×3	5	110	60	75	55	45	110	90	9	9
P50B07020	0.2	ERK-	M	○	○	149	25	14	5×3	5	110	60	75	55	45	110	90	9	9
P50B07030	0.3	ERK-	B	○	○	203	40	28	8×4	7	196	90	135	105	75	175	145	16	12
P50B07040	0.4	ERK-	B	○	○	203	40	28	8×4	7	196	90	135	105	75	175	145	16	12
P50B08050	0.5	ERK-	B	○	○	203	40	28	8×4	7	196	90	135	105	75	175	145	16	12
P50B08075	0.75	ERK-	B	○	○	203	40	28	8×4	7	198	90	135	105	75	175	145	16	12
			C	○	○	249	55	38	10×5	8	241	115	170	130	95	220	180	22	15
P50B08100	1.0	ERK-	B	○	○	203	40	28	8×4	7	198	90	135	105	75	175	145	16	12
			C	○	○	249	55	38	10×5	8	241	115	170	130	95	220	180	22	15

Motor-combined flange

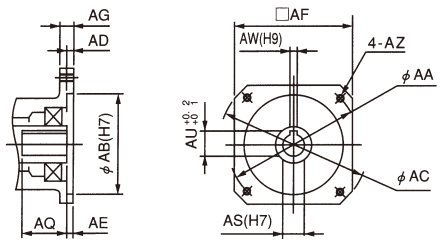

Figure-3

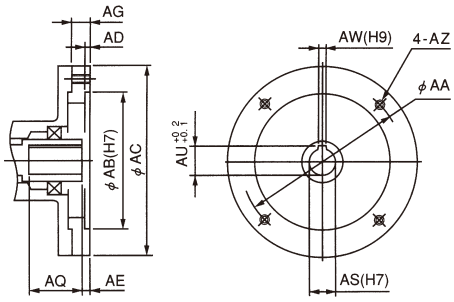

Figure-4

ERK-V type (flange-combined standing type)

M~C types

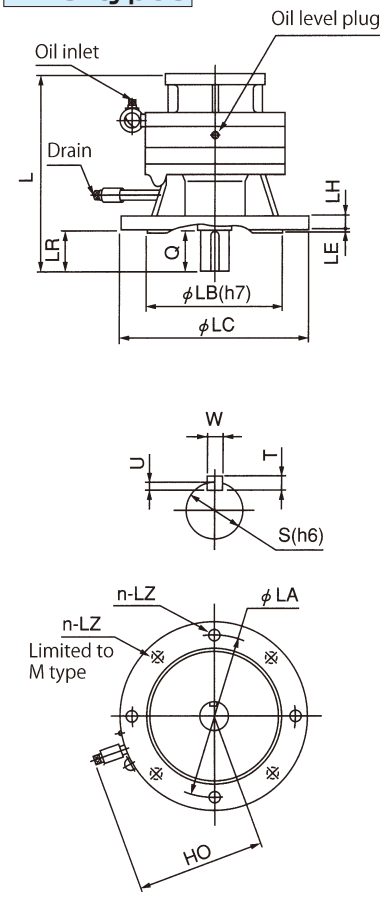

Figure-2

Standing flange Figure-2																				Illust. no.	Flow(ℓ)		Weight(kg)	
Flange								Defective motor flange																
LC	LB	LA	LE	LH	n-LZ	LR	HO	AA	AB	AC	AD	AE	AF	AG	AZ	AQ	AS	AW	AU		Horizontal	Standing	Horizontal	Standing
100	70	85	4	8	4-7	25	—	60	50	80	4	6	□60	10	M4	20	8	—	—	3	Grease	Grease	3	3
100	70	85	4	8	4-7	25	—	90	70	110	4	7	□80	10	M5	25	14	5	16	3	Grease	Grease	3	3
200	130	165	4	14	4-12	40	132	90	70	105	5	7	—	12	M5	27	14	5	16	4	0.22	0.4	12	12
200	130	165	4	14	4-12	40	132	90	70	105	5	7	—	12	M5	27	14	5	16	4	0.22	0.4	12	12
200	130	165	4	14	4-12	40	132	100	80	120	5	7	—	12	M6	30	16	5	18	4	0.22	0.4	12	12
200	130	165	4	14	4-12	40	132	100	80	120	5	7	—	12	M6	30	16	5	18	4	0.22	0.4	12	12
250	180	215	4	18	4-15	55	170	100	80	120	5	6	—	12	M6	30	16	5	18	4	0.45	0.81	24	24
200	130	165	4	14	4-12	40	132	100	80	120	5	7	—	12	M6	30	16	5	18	4	0.22	0.4	12	12
250	180	215	4	18	4-15	55	170	100	80	120	5	6	—	12	M6	30	16	5	18	4	0.45	0.81	24	24

■ Input speed 1000rpm

ERK type (base-combined horizontal type)

A~C types

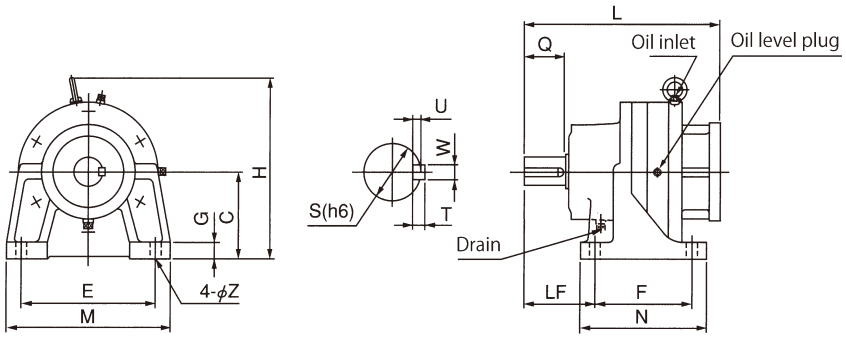

Figure-1

D, NF types

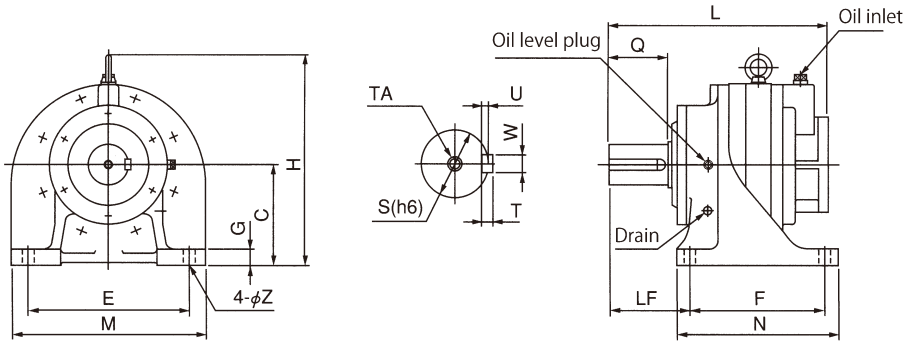

Applicable servo motor type	Motor cap. (kW)	Reducer model	Reducer type no.			Length	Output shaft end					Height		Horizontal base Figure-1 Base						
				NB	Standard	L	Q	S	W×U	T	TA	H	C	N	F	LF	M	E	G	Z
SGMGH-03A□B61	0.3	ERK-	A	—	○	217	30	22	6×3.5	6	—	196	90	120	90	65	175	145	16	12
			B	○	○	245	40	28	8×4	7	—	221	115	135	105	75	175	145	16	12
			C	○	○	264	55	38	10×5	8	—	241	115	170	130	95	220	180	22	15
SGMGH-06A□B61	0.6	ERK-	B	—	○	245	40	28	8×4	7	—	221	115	135	105	75	175	145	16	12
			C	○	○	264	55	38	10×5	8	—	241	115	170	130	95	220	180	22	15
			D	○	○	334	80	55	16×6	10	—	299	140	200	150	120	275	225	26	19
SGMGH-09A□B61	0.9	ERK-	B	—	○	245	40	28	8×4	7	—	221	115	135	105	75	175	145	16	12
			C	○	○	264	55	38	10×5	8	—	241	115	170	130	95	220	180	22	15
			D	○	○	334	80	55	16×6	10	—	299	140	200	150	120	275	225	26	19
			NE	○	—	410	110	75	20×7.5	12	M16 depth 30	399	185	300	250	150	360	300	30	22
SGMGH-12A□B61	1.2	ERK-	C	○	○	299	55	38	10×5	8	—	266	140	170	130	95	220	180	22	15
			D	○	○	364	80	55	16×6	10	—	299	140	200	150	120	275	225	26	19
			NE	○	—	408	110	75	20×7.5	12	M16 depth 30	399	185	300	250	150	360	300	30	22
SGMGH-20A□B61	2.0	ERK-	C	—	○	299	55	38	10×5	8	—	266	140	170	130	95	220	180	22	15
			D	○	○	364	80	55	16×6	10	—	299	140	200	150	120	275	225	26	19
			NE	○	○	408	110	75	20×7.5	12	M16 depth 30	399	185	300	250	150	360	300	30	22
			NF	○	—	542	140	95	25×9	14	M16 depth 30	454	210	365	295	195	425	350	35	25
SGMGH-30A□B61	3.0	ERK-	D	—	○	364	80	55	16×6	10	—	299	140	200	150	120	275	225	26	19
			NE	○	○	408	110	75	20×7.5	12	M16 depth 30	399	185	300	250	150	360	300	30	22
			NF	○	○	542	140	95	25×9	14	M16 depth 30	454	210	365	295	195	425	350	35	25
SGMGH-40A□B61	4.0	ERK-	D	—	○	392	80	55	16×6	10	—	324	165	200	150	120	275	225	26	19
			NE	○	○	498	110	75	20×7.5	12	M16 depth 30	399	185	300	250	150	360	300	30	22
			NF	○	○	542	140	95	25×9	14	M16 depth 30	454	210	365	295	195	425	350	35	25
SGMGH-55A□B61	5.5	ERK-	NE	○	○	498	110	75	20×7.5	12	M16 depth 30	399	185	300	250	150	360	300	30	22
			NF	○	○	542	140	95	25×9	14	M16 depth 30	454	210	365	295	195	425	350	35	25

Motor-combined flange

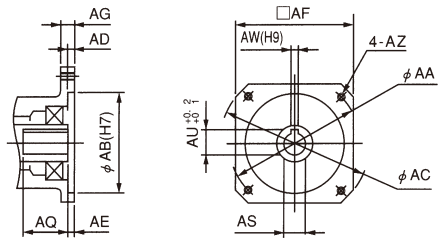

Figure-3

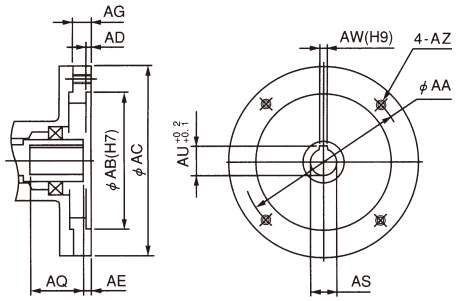

Figure-4

Note : Tolerance of AS in the figure is divided according to diameter of the shaft:
Ø19, Ø22, Ø42 : H7
Ø35 : G7

ERK-V type (flange-combined standing type)

A~C types

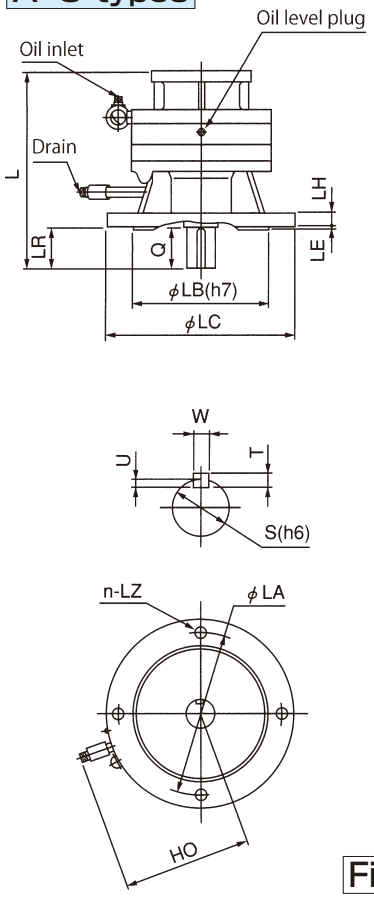

D, NF types

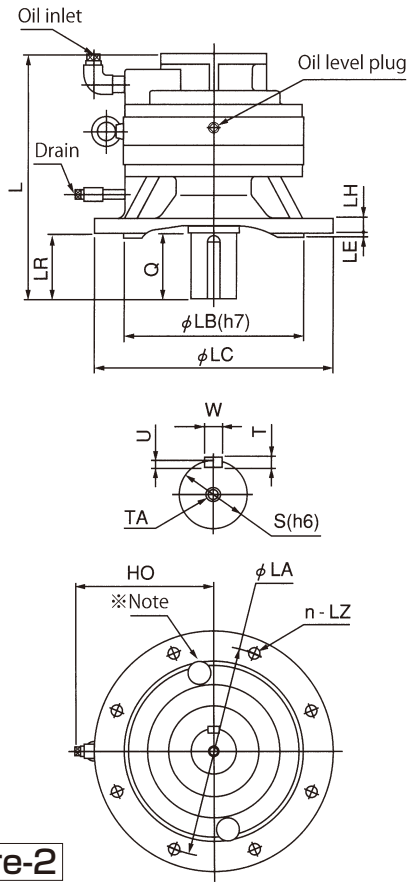

Figure-2

※Note : The NE · NF type of no-backlash specification includes a hole.

Standing flange Figure-2																				Illust. no.	Flow(ℓ)		Weight(kg)	
Flange								Defective motor flange																
LC	LB	LA	LE	LH	n-LZ	LR	HO	AA	AB	AC	AD	AE	AF	AG	AZ	AQ	AS	AW	AU		Horizontal	Standing	Horizontal	Standing
160	110	130	4	14	4-12	30	114	145	110	165	5	20	130	15	M8	40	19	5	21	3	0.16	0.29	15	15
200	130	165	4	14	4-12	40	132	145	110	165	7	20	130	15	M8	40	19	5	21	3	0.22	0.4	17	17
250	180	215	4	18	4-15	55	170	145	110	165	7	20	130	15	M8	40	19	5	21	3	0.45	0.81	26	26
200	130	165	4	14	4-12	40	132	145	110	165	7	20	130	15	M8	40	19	5	21	3	0.22	0.4	17	17
250	180	215	4	18	4-15	55	170	145	110	165	7	20	130	15	M8	40	19	5	21	3	0.45	0.81	26	26
300	230	265	5	22	8-15	80	198	145	110	165	7	20	130	18	M8	40	19	5	21	3	0.9	1.5	46	46
200	130	165	4	14	4-12	40	132	145	110	165	7	20	130	15	M8	40	22	6	24.5	3	0.22	0.4	17	17
250	180	215	4	18	4-15	55	170	145	110	165	7	20	130	15	M8	40	22	6	24.5	3	0.45	0.81	26	26
300	230	265	5	22	8-15	80	198	145	110	165	7	20	130	18	M8	40	22	6	24.5	3	0.9	1.5	46	46
400	300	350	8	25	8-19	110	231	145	110	250	7	20	—	22	M8	40	22	6	24.5	4	1.8	2.4	116	103
250	180	215	4	18	4-15	55	170	200	114.3	233	7	11	176	18	M12	71	35	10	38	3	0.45	0.81	30	30
300	230	265	5	22	8-15	80	198	200	114.3	233	7	11	176	18	M12	71	35	10	38	3	0.9	1.5	50	50
400	300	350	8	25	8-19	110	231	200	114.3	233	7	11	176	18	M12	71	35	10	38	3	1.8	2.4	102	96
250	180	215	4	18	4-15	55	170	200	114.3	233	7	11	176	18	M12	71	35	10	38	3	0.45	0.81	30	30
300	230	265	5	22	8-15	80	198	200	114.3	233	7	11	176	18	M12	71	35	10	38	3	0.9	1.5	50	50
400	300	350	8	25	8-19	110	231	200	114.3	233	7	11	176	18	M12	71	35	10	38	3	1.8	2.4	102	96
450	350	400	8	25	8-19	140	261	200	114.3	300	7	11	—	30	M12	70	35	10	38	4	3.2	4.3	202	189
300	230	265	5	22	8-15	80	198	200	114.3	233	7	11	176	18	M12	71	35	10	38	3	0.9	1.5	50	50
400	300	350	8	25	8-19	110	231	200	114.3	233	7	11	176	18	M12	71	35	10	38	3	1.8	2.4	102	96
450	350	400	8	25	8-19	140	261	200	114.3	300	7	11	—	30	M12	70	35	10	38	4	3.2	4.3	202	189
300	230	265	5	22	8-15	80	198	200	114.3	300	10	20	—	30	M12	95	42	12	45	4	0.9	1.5	63	63
400	300	350	8	25	8-19	110	231	200	114.3	350	7	40	—	25	M12	75	42	12	45	4	1.8	2.4	131	126
450	350	400	8	25	8-19	140	261	200	114.3	300	10	50	—	30	M12	110	42	12	45	4	3.2	4.3	203	190
400	300	350	8	25	8-19	110	231	200	114.3	350	7	40	—	25	M12	75	42	12	45	4	1.8	2.4	131	126
450	350	400	8	25	8-19	140	261	200	114.3	300	10	50	—	30	M12	110	42	12	45	4	3.2	4.3	203	190

■ Input speed 1500rpm

ERK type (base-combined horizontal type)

A~C types

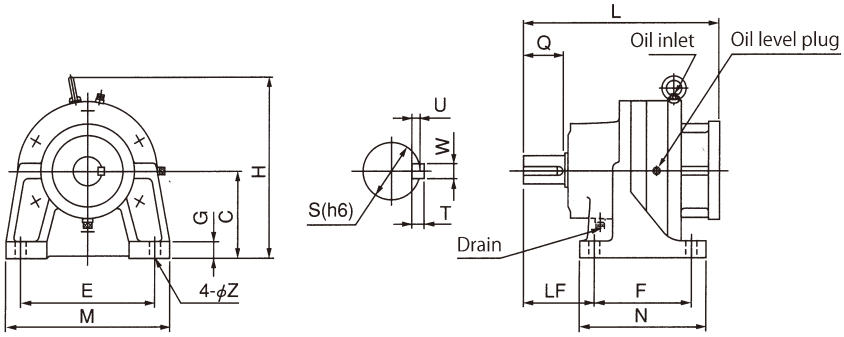

Figure-1

D, NF types

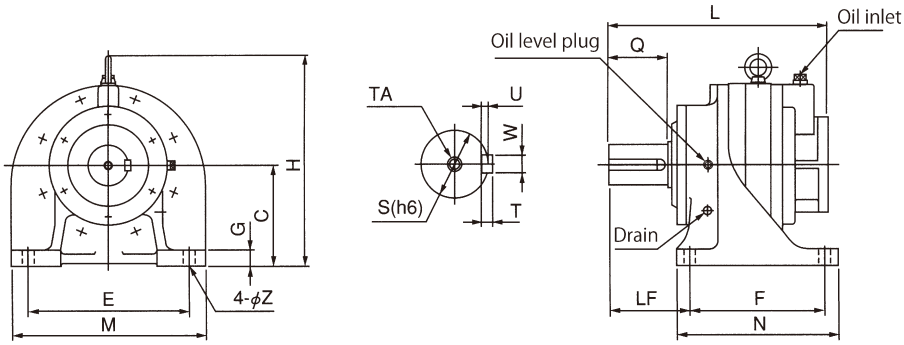

Applicable servo motor type	Motor cap. (kW)	Reducer model	Reducer type no.			Length	Output shaft end					Height		Horizontal base Figure-1 Base						
				NB	Standard	L	Q	S	W × U	T	TA	H	C	N	F	LF	M	E	G	Z
SGMGH-05A□A61	0.45	ERK-	A	—	○	217	30	22	6×3.5	6	—	196	90	120	90	65	175	145	16	12
			B	○	○	245	40	28	8×4	7	—	221	115	135	105	75	175	145	16	12
			C	○	○	264	55	38	10×5	8	—	241	115	170	130	95	220	180	22	15
SGMGH-09A□A61	0.85	ERK-	B	○	○	245	40	28	8×4	7	—	221	115	135	105	75	175	145	16	12
			C	○	○	264	55	38	10×5	8	—	241	115	170	130	95	220	180	22	15
			D	○	○	334	80	55	16×6	10	—	299	140	200	150	120	275	225	26	19
SGMGH-13A□A61	1.3	ERK-	B	—	○	245	40	28	8×4	7	—	221	115	135	105	75	175	145	16	12
			C	○	○	264	55	38	10×5	8	—	241	115	170	130	95	220	180	22	15
			D	○	○	334	80	55	16×6	10	—	299	140	200	150	120	275	225	26	19
			NE	○	—	410	110	75	20×7.5	12	M16 depth 30	399	185	300	250	150	360	300	30	22
SGMGH-20A□A61	1.8	ERK-	C	○	○	299	55	38	10×5	8	—	266	140	170	130	95	220	180	22	15
			D	○	○	364	80	55	16×6	10	—	299	140	200	150	120	275	225	26	19
			NE	○	—	408	110	75	20×7.5	12	M16 depth 30	399	185	300	250	150	360	300	30	22
SGMGH-30A□A61	2.9	ERK-	C	—	○	299	55	38	10×5	8	—	266	140	170	130	95	220	180	22	15
			D	○	○	364	80	55	16×6	10	—	299	140	200	150	120	275	225	26	19
			NE	○	○	408	110	75	20×7.5	12	M16 depth 30	399	185	300	250	150	360	300	30	22
SGMGH-44A□A61	4.4	ERK-	D	—	○	364	80	55	16×6	10	—	299	140	200	150	120	275	225	26	19
			NE	○	○	408	110	75	20×7.5	12	M16 depth 30	399	185	300	250	150	360	300	30	22
			NF	○	○	542	140	95	25×9	14	M16 depth 30	454	210	365	295	195	425	350	35	25

Motor-combined flange

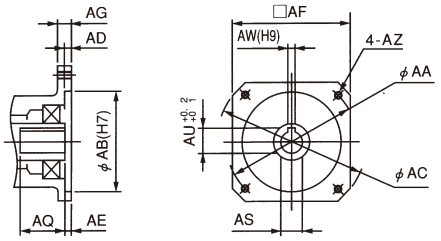

Figure-3

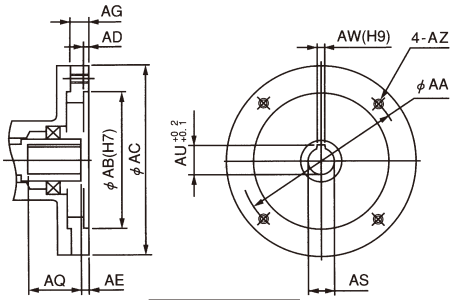

Figure-4

Note : Tolerance of AS in the figure is divided according to diameter of the shaft:
Ø14~Ø22 : H7
Ø35 : G7

ERK-V type (flange-combined standing type)

A~NF types

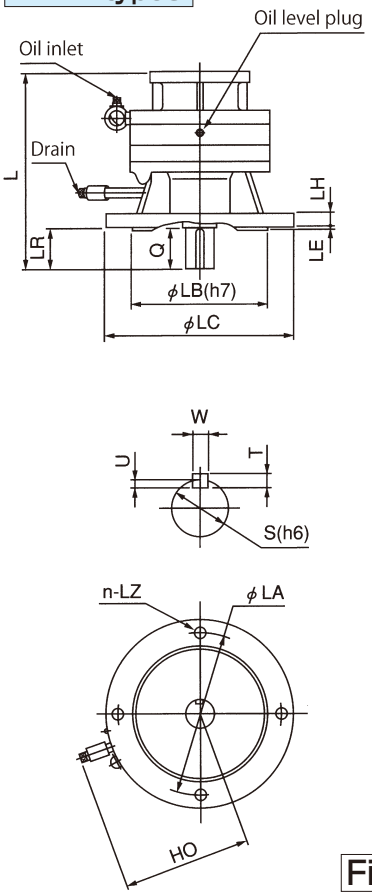

D~NF types

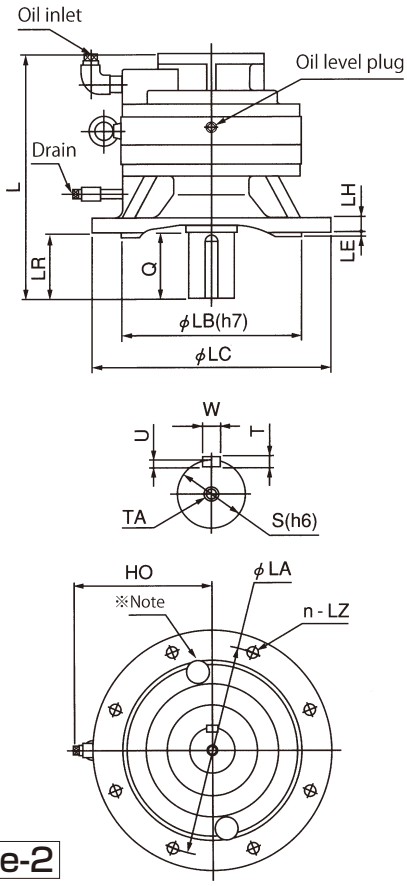

Figure-2

※Note : The NE · NF type of no-backlash specification includes a hole.

Standing flange Figure-2																				Illust no.	Flow(ℓ)		Weight(kg)	
Flange								Defective motor flange																
LC	LB	LA	LE	LH	n-LZ	LR	HO	AA	AB	AC	AD	AE	AF	AG	AZ	AQ	AS	AW	AU		Horizontal	Standing	Horizontal	Standing
160	110	130	4	14	4-12	30	114	145	110	165	7	20	130	15	M8	40	19	5	21	3	0.16	0.29	14	14
200	130	165	4	14	4-12	40	132	145	110	165	7	20	130	15	M8	40	19	5	21	3	0.22	0.4	16	16
250	180	215	4	18	4-15	55	170	145	110	165	7	20	130	15	M8	40	19	5	21	3	0.45	0.81	26	26
200	130	165	4	14	4-12	40	132	145	110	165	7	20	130	15	M8	40	19	5	21	3	0.22	0.4	16	16
250	180	215	4	18	4-15	55	170	145	110	165	7	20	130	15	M8	40	19	5	21	3	0.45	0.81	26	26
300	230	265	5	22	8-15	80	198	145	110	165	7	20	130	18	M8	40	19	5	21	3	0.9	1.5	46	46
200	130	165	4	14	4-12	40	132	145	110	165	7	20	130	15	M8	40	22	6	24.5	3	0.22	0.4	16	16
250	180	215	4	18	4-15	55	170	145	110	165	7	20	130	15	M8	40	22	6	24.5	3	0.45	0.81	26	26
300	230	265	5	22	8-15	80	198	145	110	165	7	20	130	18	M8	40	22	6	24.5	3	0.9	1.5	46	46
400	300	350	8	25	8-19	110	231	145	110	250	7	20	—	22	M8	40	22	6	24.5	4	1.8	2.4	102	102
250	180	215	4	18	4-15	55	170	200	114.3	233	7	11	176	18	M12	71	35	10	38	3	0.45	0.81	30	30
300	230	265	5	22	8-15	80	198	200	114.3	233	7	11	176	18	M12	71	35	10	38	3	0.9	1.5	50	50
400	300	350	8	25	8-19	110	231	200	114.3	233	7	11	176	18	M12	71	35	10	38	3	1.8	2.4	102	96
250	180	215	4	18	4-15	55	170	200	114.3	233	7	11	176	18	M12	71	35	10	38	3	0.45	0.81	30	30
300	230	265	5	22	8-15	80	198	200	114.3	233	7	11	176	18	M12	71	35	10	38	3	0.9	1.5	50	50
400	300	350	8	25	8-19	110	231	200	114.3	233	7	11	176	18	M12	71	35	10	38	3	1.8	2.4	102	96
300	230	265	5	22	8-15	80	198	200	114.3	233	7	11	176	18	M12	71	35	10	38	3	0.9	1.5	50	50
400	300	350	8	25	8-15	110	231	200	114.3	233	7	11	176	18	M12	71	35	10	38	3	1.8	2.4	102	96
450	350	400	8	25	8-15	140	261	200	114.3	300	10	11	—	30	M12	71	35	10	38	4	3.2	4.3	203	190

■ Input speed 2000rpm

ERK type (base-combined horizontal type)

C type

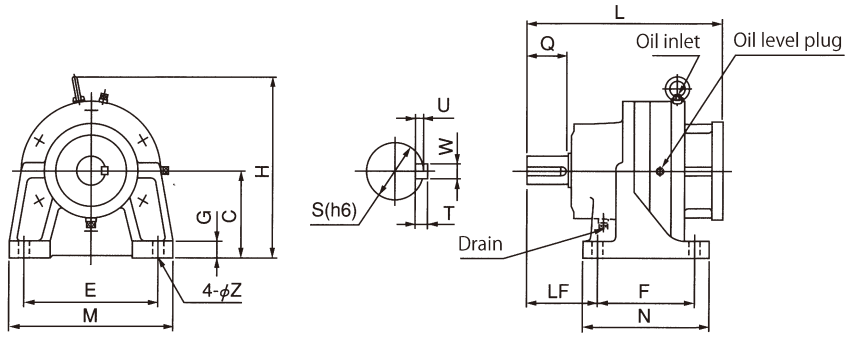

Figure-1

D, NF types

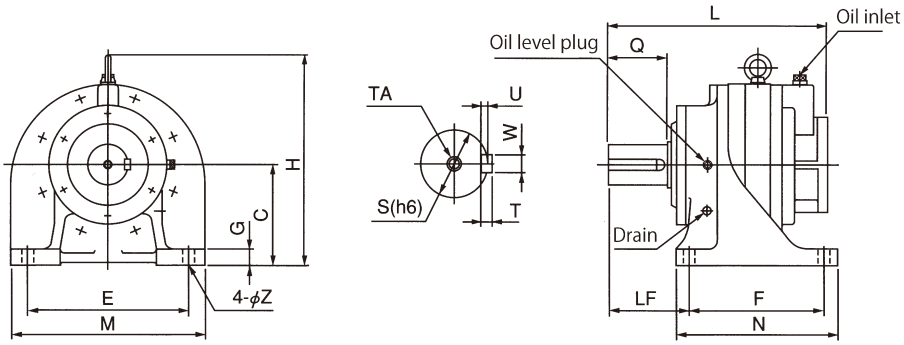

Applicable servo motor type	Motor cap. (kW)	Reducer model	Reducer type no.			Length	Output shaft end					Height		Horizontal base Figure-1 Base						
				NB	Standard	L	Q	S	W × U	T	TA	H	C	N	F	LF	M	E	G	Z
SGMD-22A□AB	2.2	ERK-	C	○	○	296	55	38	10×5	8	—	266	140	170	130	95	220	180	22	15
			D	○	○	366	80	55	16×6	10	—	299	140	200	150	120	275	225	26	19
			NE	○	—	410	110	75	20×7.5	12	M16 depth 30	399	185	300	250	150	360	300	30	22
SGMD-32A□AB	3.2	ERK-	C	—	○	296	55	38	10×5	8	—	266	140	170	130	95	220	180	22	15
			D	○	○	366	80	55	16×6	10	—	299	140	200	150	120	275	225	26	19
			NE	○	○	410	110	75	20×7.5	12	M16 depth 30	399	185	300	250	150	360	300	30	22
SGMD-40A□AB	4.0	ERK-	C	—	○	296	55	38	10×5	8	—	266	140	170	130	95	220	180	22	15
			D	○	○	366	80	55	16×6	10	—	299	140	200	150	120	275	225	26	19
			NE	○	○	410	110	75	20×7.5	12	M16 depth 30	399	185	300	250	150	360	300	30	22

Motor-combined flange

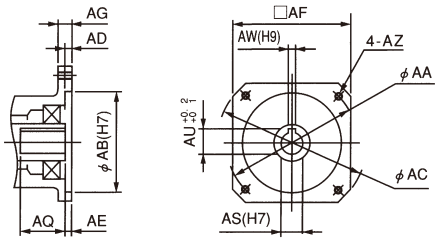

Figure-3

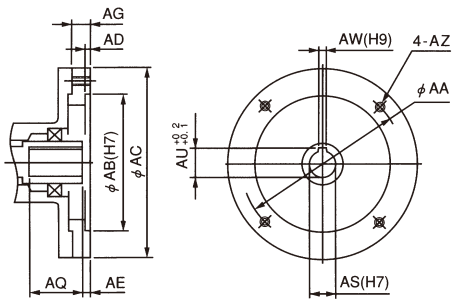

Figure-4

ERK-V type (flange-combined standing type)

C type

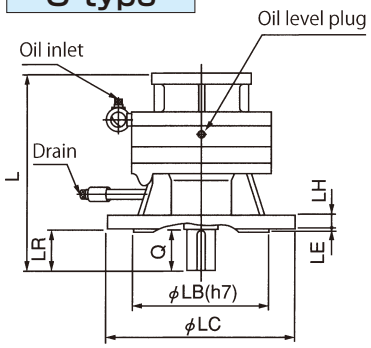

D, NF types

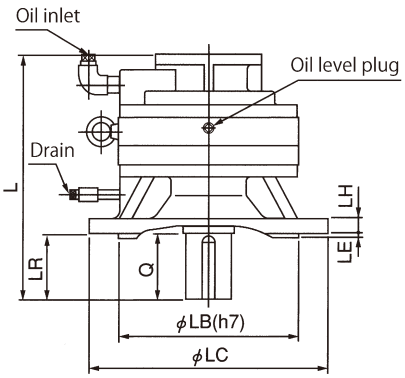

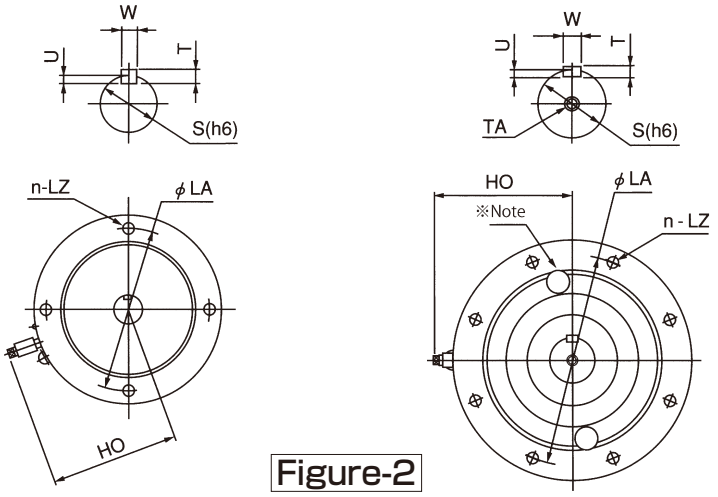

Figure-2

※Note : The NE · NF type of no-backlash specification includes a hole.

Standing flange Figure-2																				Illust no.	Flow(ℓ)		Weight(kg)	
Flange								Defective motor flange																
LC	LB	LA	LE	LH	n-LZ	LR	HO	AA	AB	AC	AD	AE	AF	AG	AZ	AQ	AS	AW	AU		Horizontal	Standing	Horizontal	Standing
250	180	215	4	18	4-15	55	170	235	200	270	7	7	—	22	M12	50	28	8	31	4	0.45	0.81	37	37
300	230	265	5	22	8-15	80	198	235	200	270	7	7	—	22	M12	50	28	8	31	4	0.9	1.5	57	57
400	300	350	8	25	8-19	110	231	235	200	270	7	7	—	22	M12	50	28	8	31	4	1.8	2.4	112	106
250	180	215	4	18	4-15	55	170	235	200	270	7	7	—	22	M12	50	28	8	31	4	0.45	0.81	37	37
300	230	265	5	22	8-15	80	198	235	200	270	7	7	—	22	M12	50	28	8	31	4	0.9	1.5	57	57
400	300	350	8	25	8-19	110	231	235	200	270	7	7	—	22	M12	50	28	8	31	4	1.8	2.4	112	106
250	180	215	4	18	4-15	55	170	235	200	270	7	7	—	22	M12	60	32	10	35	4	0.45	0.81	37	37
300	230	265	5	22	8-15	80	198	235	200	270	7	7	—	22	M12	60	32	10	35	4	0.9	1.5	57	57
400	300	350	8	25	8-19	110	231	235	200	270	7	7	—	22	M12	60	32	10	35	4	1.8	2.4	112	106

■ Input speed 3000rpm

ERK type (base-combined horizontal type)

M~C types

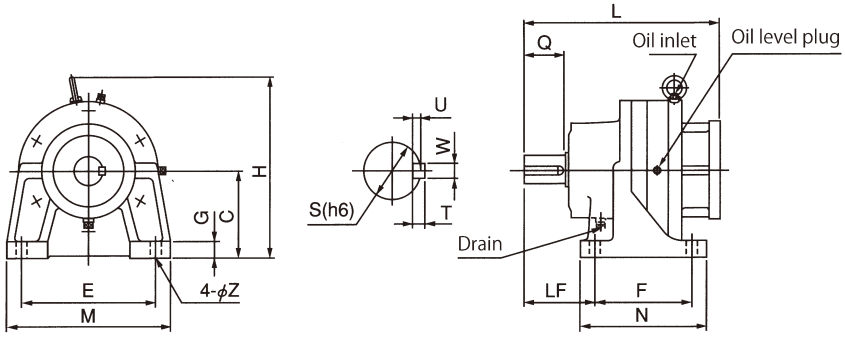

Figure-1

D type

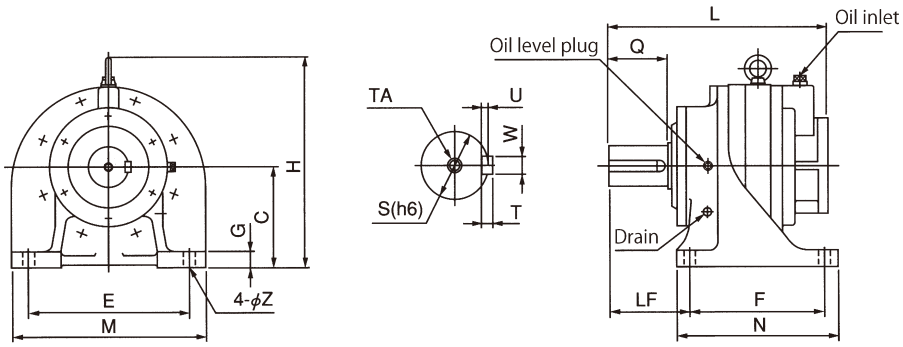

Applicable servo motor type	Motor cap. (kW)	Reducer model	Reducer type no.			Length	Output shaft end					Height		Horizontal base Figure-1 Base						
				NB	Standard	L	Q	S	W×U	T	TA	H	C	N	F	LF	M	E	G	Z
SGMAH-01A□A41	0.1	ERK-	M	○	○	159	25	14	5×3	5	—	110	60	75	55	45	110	90	9	9
SGMAH-02A□A41	0.2	ERK-	M	○	○	149	25	14	5×3	5	—	110	60	75	55	45	110	90	9	9
SGMAH-04A□A41	0.4	ERK-	B	○	○	213	40	28	8×4	7	—	196	90	135	105	75	175	145	16	12
SGMAH-08A□A41	0.75	ERK-	B	○	○	218	40	28	8×4	7	—	196	90	135	105	75	175	145	16	12
			C	○	○	264	55	38	10×5	8	—	241	115	170	130	95	220	180	22	15
SGMSH-10A□A61	1.0	ERK-	B	○	○	245	40	28	8×4	7	—	221	115	135	105	75	175	145	16	12
			C	○	○	264	55	38	10×5	8	—	241	115	170	130	95	220	180	22	15
SGMSH-15A□A61	1.5	ERK-	B	—	○	245	40	28	8×4	7	—	221	115	135	105	75	175	145	16	12
			C	○	○	264	55	38	10×5	8	—	241	115	170	130	95	220	180	22	15
			D	○	○	339	80	55	16×6	10	—	299	140	200	150	120	275	225	26	19
SGMSH-20A□A61	2.0	ERK-	B	—	○	245	40	28	8×4	7	—	221	115	135	105	75	175	145	16	12
			C	○	○	264	55	38	10×5	8	—	241	115	170	130	95	220	180	22	15
			D	○	○	339	80	55	16×6	10	—	299	140	200	150	120	275	225	26	19
SGMSH-30A□A61	3.0	ERK-	C	○	○	279	55	38	10×5	8	—	266	140	170	130	95	220	180	22	15
			D	○	○	339	80	55	16×6	10	—	299	140	200	150	120	275	225	26	19
SGMSH-40A□A61	4.0	ERK-	C	—	○	279	55	38	10×5	8	—	266	140	170	130	95	220	180	22	15
			D	○	○	339	80	55	16×6	10	—	299	140	200	150	120	275	225	26	19
SGMSH-50A□A61	5.0	ERK-	C	—	○	279	55	38	10×5	8	—	266	140	170	130	95	220	180	22	15
			D	○	○	339	80	55	16×6	10	—	299	140	200	150	120	275	225	26	19

Motor-combined flange

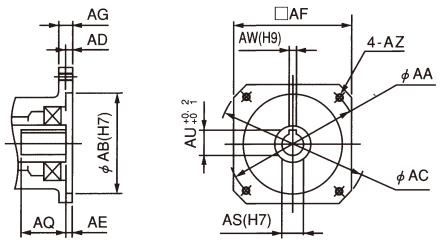

Figure-3

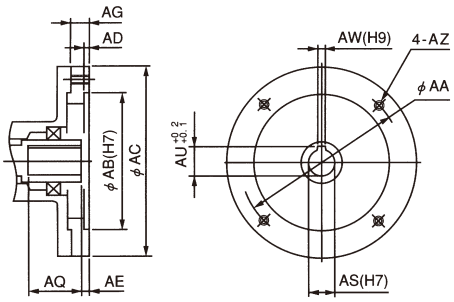

Figure-4

ERK-V type (flange-combined standing type)

M~C types

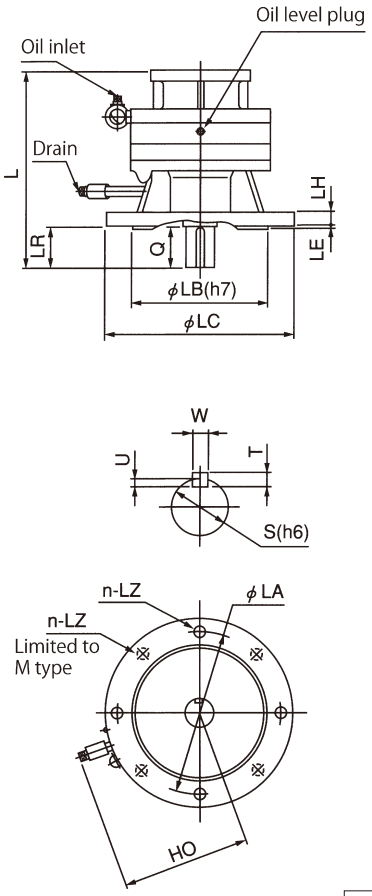

D type

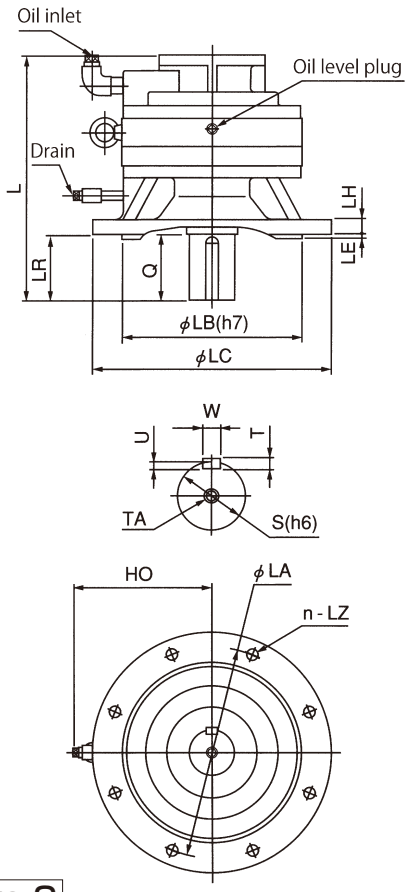

Figure-2

Standing flange Figure-2																								
Flange								Defective motor flange												Illust. no.	Flow(ℓ)		Weight(kg)	
LC	LB	LA	LE	LH	n-LZ	LR	HO	AA	AB	AC	AD	AE	AF	AG	AZ	AQ	AS	AW	AU		Horizontal	Standing	Horizontal	Standing
100	70	85	4	8	4-7	25	—	46	30	80	5	5	60	10	M4	22	8	3	9.2	3	Grease	Grease	4	4
100	70	85	4	8	4-7	25	—	70	50	110	5	7	80	10	M5	25	14	5	16	3	Grease	Grease	3	3
200	130	165	4	14	4-12	40	132	70	50	120	10	5	—	10	M5	27	14	5	16	4	0.22	0.4	13	13
200	130	165	4	14	4-12	40	132	90	70	120	4	7	—	15	M6	35	16	5	18	4	0.22	0.4	13	13
250	180	215	4	18	4-15	55	170	90	70	160	7	7	—	15	M6	35	16	5	18	4	0.45	0.81	26	26
200	130	165	4	14	4-12	40	132	115	95	165	7	7	130	15	M6	40	24	8	27	3	0.22	0.4	17	17
250	180	215	4	18	4-15	55	170	115	95	165	7	7	130	15	M6	40	24	8	27	3	0.45	0.81	26	26
200	130	165	4	14	4-12	40	132	115	95	165	7	7	130	15	M6	40	24	8	27	3	0.22	0.4	17	17
250	180	215	4	18	4-15	55	170	115	95	165	7	7	130	15	M6	40	24	8	27	3	0.45	0.81	26	26
300	230	265	5	22	8-15	80	198	115	95	200	5	7	—	15	M6	45	24	8	27	4	0.9	1.5	50	50
200	130	165	4	14	4-12	40	132	115	95	165	7	7	130	15	M6	40	24	8	27	3	0.22	0.4	17	17
250	180	215	4	18	4-15	55	170	115	95	165	7	7	130	15	M6	40	24	8	27	3	0.45	0.81	26	26
300	230	265	5	22	8-15	80	198	115	95	200	5	7	—	15	M6	45	24	8	27	4	0.9	1.5	51	51
250	180	215	4	18	4-15	55	170	145	110	165	7	10	—	18	M8	57	28	8	31	4	0.45	0.81	28	28
300	230	265	5	22	8-15	80	198	145	110	200	7	10	—	15	M8	55	28	8	31	4	0.9	1.5	51	51
250	180	215	4	18	4-15	55	170	145	110	165	7	10	—	18	M8	57	28	8	31	4	0.45	0.81	28	28
300	230	265	5	22	8-15	80	198	145	110	200	7	10	—	15	M8	55	28	8	31	4	0.9	1.5	51	51
250	180	215	4	18	4-15	55	170	145	110	165	7	10	—	18	M8	57	28	8	31	4	0.45	0.81	28	28
300	230	265	5	22	8-15	80	198	145	110	200	7	10	—	15	M8	55	28	8	31	4	0.9	1.5	51	51

STEP 1 Selection of reductin ratio

＊See [Performance Table] on EF9～EF16 pages.

■Select a reduction ratio from input shaft speed and max. required output speed.

$$\text{Reduction ratio}=\frac{\text{Max. required output shaft speed}}{\text{Rated RPM of the servo motor (input) shaft}}$$

＊Select a reduction ratio of CORONET REDUCER to meet the reduction ratio obtained by calculation.

Examples of selection ▶
- ●Rated rpm of the servo motor / 2000rpm
- ●Servo motor capacity / 2.2kW
- ●Max. required output rpm / 65rpm
- ●No-backlash spec.

▷ $\text{Reduction ratio}=\frac{65}{2000}\fallingdotseq\frac{1}{29}$

STEP 2 Reducer assumption equation

＊See [Coefficient of utilization] on EF42 page and [Performance Table] on EF9~EF16 pages.

In general selection:

■Select type No. according to input shaft rpm and motor capacity.
■Apply 1.2 as coefficient of utilization.
■Duty factor is 50%ED(10min cycle).

●Example of performance table / Input shaft speed 2000rpm
No-backlash spec.

Motor cap.(W) / Reduction ratio	2.2				
	Type No.	Output torque		Permissible torque	
		N・m	kgf・m	N・m	kgf・m
11	C	(95.6)	(9.75)	115	11.7
17	C	(140)	(14.3)	168	17.1
29	D	255	26.0	388	39.6
35	D	307	31.3	388	39.6
47	NE	309	31.6	1000	102
59	NE	388	39.6	917	93.6
71	NE	467	47.7	741	75.6

＊Output torque / torque value incurred to the output shaft of the reducer if rated motor torque is put
＊Permissible torque / permissible torque of the reducer

Selection example 1 ▶
- ●Reduction ratio / 1/29
- ●Available machine / transport vehicle
- ●Conditions of use / operation for 15 hours daily
- ●Coefficient of utilization / 1.4
- ●No-backlash spec.

▽

According to examples of the performance table
Type No. / D type
Output torque / 255N・m (26.0kgf・m)
Output torque / 388N・m (39.6kgf・m)

$$\text{Coefficient of utilization}=\frac{388}{255}=1.52>1.4$$

●Mean torque equation

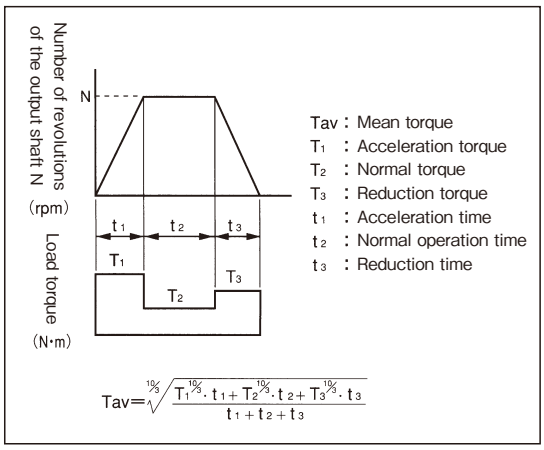

Under poor conditions of use

■In case of sharp acceleration/reduction, it may impair life of the reducer, so please be advised that acceleration & reduction torque not exceed 1.5 times permissible .
Even if mean torque is within permissible torque, select type no. in consideration of coefficient of utilization according to conditions of use.
Note1. Set limited torque of the motor to be limited torque of motor (limited current)×reduction ratio < permissible torque of reducer×1.5.
2. In case of setting limited torque of the motor to be more than the upper limit, there is need to increase type no. of the reducer.

Selection example 2 ▶
- ●Reduction ratio / 1/29
- ●Available machine / transport vehicle
- ●Conditions of use / operation for 15 hours daily
- ●Coefficient of utilization / 1.4
- ●No-backlash spec.

▽

According to examples of the performance table
Type No. / D type
Output torque / 255N・m (26.0kgf・m)
Output torque / 388N・m (39.6kgf・m)

▷ (T_1=568N·m (58kgf・m) t_1=0.2sec
T_2=196N·m (20kgf・m) t_2=4sec
T_3=176N·m (18kgf・m) t_3=0.2sec)

$$Tav=\sqrt[10/3]{\frac{568^{10/3}\times0.2+196^{10/3}\times4+176^{10/3}\times0.2}{0.2+4+0.2}}$$

=258N・m<388N・m

＊Coefficient of utilization= $\frac{388}{258}$=1.5>1.4

＊Temporary reduction=388N・m×1.5
=582N・m>568N・m

STEP 3 Calculation of shaft load

∗See [Permissible Shaft Load Table] on EF43 page.

●Select type no. so that radial load and thrust load given to the output shaft and input shaft do not exceed the permissible values mentioned in the catalogue.

●Connecting method & properties of load

- Coupling……Little, except rotary power
- Free……Radial load
- Chain……Radial load
- Spur gear……Radial load
- Helical gear…Radial+thrust load
- Bevel gear……Radial+thrust load

∗Criteria:
P.C.D is 5 folds of diameter for free;
In case of chain gear, P.C.D requires 3 folds or more of shaft diameter.

●Permissible shaft load
Excessive shaft load may be a factor to significantly decrease the life of the reducer.
Examine [Permissible shaft load] on EF43 PAGE whenever selecting type no. Also, refer to the following equation whenever obtaining radial load acting on the shaft according to load torque.

$$P=\frac{T\times f}{R}$$

P : Radial load
T : Calibrated torque
(Mean torque×coefficient of utilization)
R : Circular radius of pitch, e.g. Free

Motor capacity(W)	Transfer coefficient
Chain & sprocket	1.00
Gear	1.05~1.30
Free belt	2.00~2.50

Selection example ▶

●Calibration torque = 265 N・m×1.4
= 371N・m
(27.0kgf・m×1.4=37.8kgf・m)
●Gear radius R = 0.09m
●Transfer coefficient f = 10.5

∗Radial load is:

$$P=\frac{370N\cdot m\times 1.05}{0.09}=4320N$$

$$\left(\frac{37.8kgf\cdot m\times 1.05}{0.09}=441kgf\right)$$

∗As mentioned in [Permissible shaft load table] on EF43 page, permissible radial load of type no. D is 4410N (450kgf), so it is within the permissible range.
∗If actual shaft load is larger than the permissible value entioned in the catalogue, consult on whether or not to increase 1step of type no.

■Coefficient of utilization for CORONET REDUCER

∗Torque mentioned in the catalogue is set on condition of operation for 10 hours a day under constant load. Therefore in general uses, there is no trouble when it is selected as it is for use. However, if load is periodically changed, e.g. impact load is frequently given, calibrate the required torque according to coefficient of utilization.

Conditions of operation		10 hours or less	10~24 hours
Type of load	General load(U)	1.0	1.2
	Middle-level impact(M)	1.2	1.4
	High-level impact(H)	1.4	1.6

■Types of machines and loads

U : universal load **M** : middle-level impact load **H** : high-level impact load

Machine	Load
Conveyror(uniform load)	
Belt conveyor	U
Bucket conveyor	U
Chain conveyor	U
Screw conveyor	U
Oven conveyor	U
Conveyor(load under large impact)	
Belt conveyor	M
Bucket conveyor	M
Chain conveyor	M
Screw conveyor	M
Oven conveyor	M
Reciprocating conveyor	H
Crane & hoist	
Traveling crane	M
Hoist	U
Lift	M
Elevator for unloading	M

Machine	Load
Mechanical processing & machine tool	
Bender	M
Punch press	H
Plate planer	H
Tapping machine	H
Others for main shaft	M
Others for transportation	U
Iron-making machine	
For discharge vehicles	M
Forming machine	H
Slitter	M
Table conveyor	M
Retractor	M

Machine	Load
Printing machines	U
Textile & dyeing machine	
Textile machine	M
Spinning machine	M
Dryer	M
Dyeing machine	M
Polishing machine	M
Tensioning machine	M
Winder	M
Power generator	U

■No-backlash type

＊If a gear or pulley is connected to the Coronet Reducer, make sure that shaft load is within the permissible numerical values as shown in the right table for use.

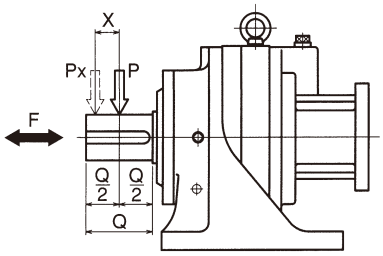

P : Permissible radial load (N)
K : Positive number (mm)
F : Permissible thrust load (N)
X : mm

$$Px=\left(\frac{K}{K+X}\right)P$$

Permissible shaft load	Output shaft		
	Type No. ( ) available for 2step type	Positive number K	Permissible shaft load (Total reduction ratio)
P	M	48mm	323N (33kgf)
F			157N (16kgf)
P	B (N □ B)	74mm	1180N (120kgf)
F			588N (60kgf)
P	C (N □ C)	94mm	2450N (250kgf)
F			1230N (125kgf)
P	D (N □ D)	196mm	4410N (450kgf)
F			2210N (225kgf)
P	NE (N □ E)	247mm	6860N (700kgf)
F			3430N (350kgf)
P	NF (N □ F)	295mm	10800N (1100kgf)
F			5370N (550kgf)

■Standard type

＊If a gear or free is connected to the Coronet Reducer, make sure that shaft load is within the permissible numerical values as shown in the right table for use.

＊Permissible thrust load is a half of the numerical value mentioned in the graph.

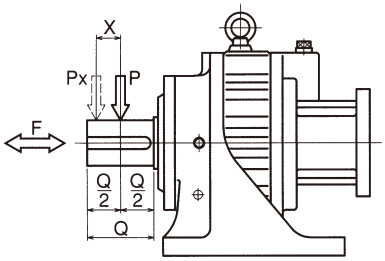

P : Permissible radial load (N)
K : Positive number (mm)
F : Permissible thrust load (N)
X : mm

$$Px=\left(\frac{K}{K+X}\right)P$$

Output shaft	
Type no. ( ) available for 2step type	Positive number K
M	48mm
A (□A)	64mm
B (N□B)	74mm
C (N□C)	94mm
D (N□D)	196mm
NE (N□E)	247mm
NF (N□F)	295mm

Output shaft side

M type

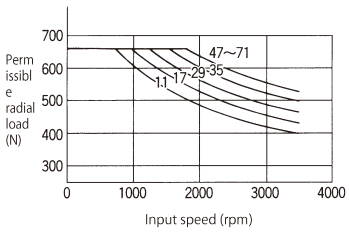

A type

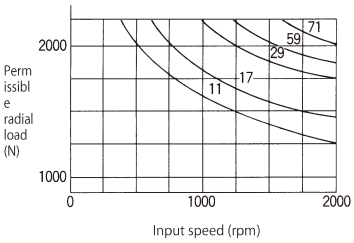

B type

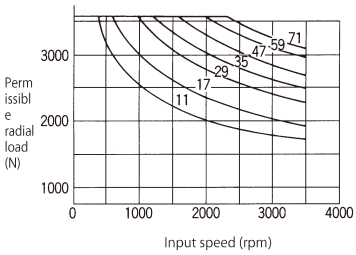

C type

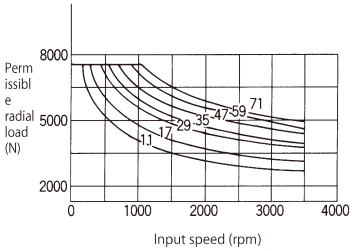

D type

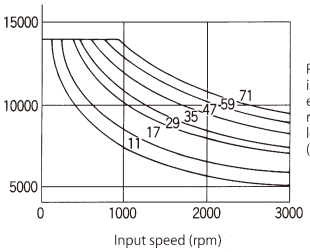

NE type

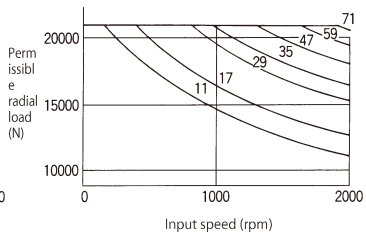

NF type

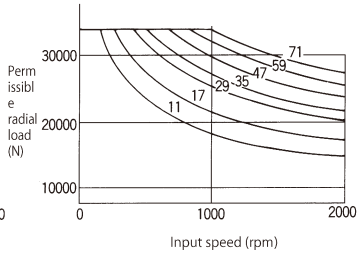

■ Permissible input speed (rpm)

Type	M	A	B	C	D	NE	NF
Permissible input speed	3600	2000	3600	3600	3000	2000	2000

運転サイクルは10分サイクルの50%EDとなります。

■ Internal moment of inertia (input shaft conversion)

(kg・m²)

Type No. \ Reduction ratio	11	17	29	35	47	59	71
M	0.000018	0.000017	0.000016	0.000016	0.00001575	0.00001575	0.00001575
A	0.000055	0.0000675	0.000065	0.0000625	0.0000625	0.0000625	0.0000625
B	0.00007	0.0000975	0.0000925	0.0000925	0.00009	0.00009	0.00009
C	0.00031	0.0003425	0.0004175	0.000415	0.00041	0.00041	0.0004075
D	0.000775	0.0011	0.0012	0.001175	0.001175	0.00115	0.00115
NE	0.00315	0.00525	0.00495	0.0049	0.00485	0.004825	0.0048
NF	0.00875	0.0075	0.013	0.01275	0.01275	0.0125	0.0125

■ Lubricant

■ Lubricants

● In case of lubrication with grease

Roughness & viscosity	NLGI-No.00
Common oil	GM Grease S*

● In case of lubrication with oil

Type No.	A~C types	D~NF types
Roughness & viscosity	JIS K2219 gear oil, 2 kinds for industrial uses ISO VG100	JIS K2219 gear oil, 2 kinds for industrial uses ISO VG220
Idemitsu	Toughness Super Gear Oil 100*	Toughness Super Gear Oil 220*
General	SP Gear Roll 100	SP Gear Roll 220
Eneos	Bosnok M100	Bosnok M220
Mobil	Mobil Gear 629	Mobil Gear 630
Exxon	Spartan EP150	Spartan EP220
Showa Shell	Omara Oil 100	Omara Oil 220
Jomo	Redax 100	Redax 220
Cosmo	Cosmo Gear SE100	Cosmo Gear SE220

● The ring mount handstand types of A, B, and C types are lubricated with grease.
● * mark indicates lubricant released for filling of standard specification.

■ Lubricating mode and exclusive lubricant

The most proper lubricating mode and exclusive lubricant are fixed in terms of function so that functions of the CORONET REDUCER can be fully displayed, so use the exclusive lubricants mentioned in the right table.
In addition, lubricant is filled in the CORONET REDUCER at release.

* The flow is displayed in each dimensional table.

■ Lubricant and surrounding temperature

Please install at 0℃ ~ 40℃ of surrounding temperature. Lubricant is required to be changed or parts replaced for use at temperature beyond the said range(higher or lower). Then contact us in advance.

■ Intervals of replacement

Grease…20,000 hours(overhaul)
or every 4 ~ 5 years
Oil……3,000 hours

● The positions of oil inlet and drain for lubrication with oil onto each type are as shown in the right figure.

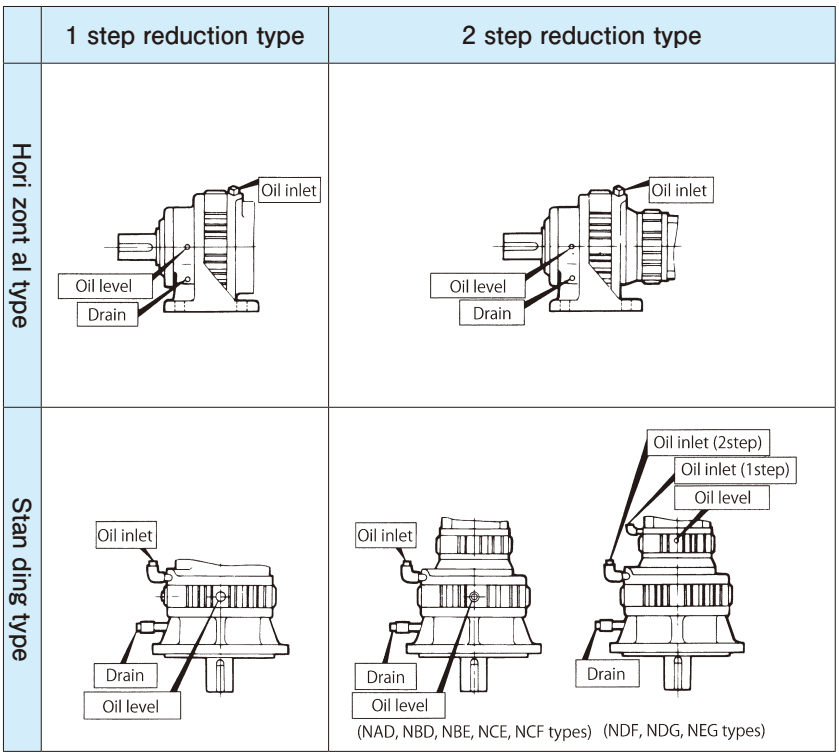

* In case that 1step of 2step reduction standing type is of A~C types, lubrication with grease applies to 1step.

Cautions for storage

Whenever temporarily keeping the product, keep the following directions:

① Keep in a clean and dry place.
② Whenever storing outdoors or in a humid place, put in a box so that it does not directly contact rain or external air and cover with a vinyl sheet(Take a measure to prevent rust.).

■ Cautions for operation

■ When the reducer is delivered to you・・・

Eliminate the tape wound on the output shaft and wipe off the anti-rust-additives with diesel.
※ The key is annexed to the output shaft.(VRHF series only for an extended shaft)
※ Lubricant(grease) is already filled in the reducer.
It is available as it is.

■ Fixation & installation

- Avoid use in a place where rain or water drops directly.
  - ・In case of use outdoors or in a place where dust and water drops, consult in advance.
- Use under oily conditions in the air significantly impairs performance of the reducer. Consult prior to use.
- Install at 0℃ ~40℃ of surrounding temperature.
  - ・In case of use at temperature out of the above-mentioned range, contact the headquarters and consult on this.
- Firmly fix with a bolt onto a solid stand without vibration.
- Install in consideration of convenience in repair and inspection.

■ Cautions prior to starting the operation

- Unless designated otherwise specifically, for lubricant, a specified amount of grease is filled at factory release, so it is available as it is as soon as it arrives.
- At initial operation, check the rotating direction of the output shaft and then gradually apply load.

■ Cautions during operation

- Avoid overload.
- Ensure that input speed shall not be the number of revolutions beyond the specification.
- In the following cases, stop the operation and check the following points:
  - ・If temperature sharply increases
  - ・If an abnormal noise appears sharply
  - ・If the number of revolutions becomes unstable sharply
- These may be caused by the following matters, so rapidly respond to it or contact us.
  - ・Is it under overload condition?
  - ・Is lubricant insufficient or deteriorated, or is lubricant of other type used?
  - ・Is the axis, gear, and motor side damaged?
  - ・Is jointing with other machines poor?

■ Disassembly

- ABLE REDUCER is designed not to allow disassembly.

■ Warranty

- A warranty period is one year after the product is delivered to you.

■ Lubricant use

- ● The ABLE REDUCER is of grease-seal type in all models.
  A specified amount of grease is filled at factory release, so you can use as soon as it is delivered to you.
- ● It is impossible to exchange grease.
- ● In case of use at 0℃ ~40℃ of surrounding temperature at usual times, consider this in advance.

■ Daily check points

- ● Is reducer case temperature excessively high during operation? (Up to + 50℃ is not significant.)
- ● Is there an abnormal noise in the bearing, gear, etc?
- ● Is there abnormal vibration in the reducer?
  ＊ Upon an abnormal phenomenon, immediately stop the operation and contact us.
- ● Is there a lubricant leak?
  ＊ Upon an oil leak, contact us.

■ Periodic check points

- ● Are there overload and abnormal rotation?
- ● Are free, sprocket, and reducer assembling bolts loose?
- ● Is there an abnormal condition in the electric system?
- ● Checkup and repair of major parts

※ Upon an abnormal condition, immediately stop the operation and contact us.

- ● Oil leak

※ Upon an oil leak, contact us.

■ Scrapping

Whenever scrapping the ABLE REDUCER, classify the parts by material into industrial wastes as specified in the laws and regulations of self-governing bodies. Material of parts can be divided into four:

① Rubber parts : Oil seal, seat packing, rubber cap, seal used for bearing on the motor flange, etc.
② Aluminum parts : Motor flange, output shaft holder
③ Grease : Wipe off grease attached to parts with dry cloth and scrap into oils.
④ Iron parts : Parts other than those mentioned in the above

CAD Download Service

You can download the CAD drawings of ABLE REDUCER VRG series.

http://www.nidec-shimpo.co.jp/

日本電産シンポ

検　索

Click the CAD Drawing Button.

Click the ABLE REDUCER VRG Series.

A list of business addresses

Customer Service Center Business hours weekdays 09:00 ~ 17:30 (closed for Saturday & Sunday, the 15th day of July, and year-end and New Year's)

●Inquiries & consultations about products, technical matters repair and parts ●Requests for consultations on catalogue, user manual, CAD dimensional drawing, certificates ●Other inquiries

☎ 0570 – 06 – 4311 (Carefully, Service, No.1, No.1) FAX (075) 958-1297 E-mail osc@nidec-shimpo.co.jp

●Call charged. The call charges differ according to call section and type of cellular phone.

SHIMPO All for dreams

NIDEC-SHIMPO CORPORATION

■Prior to product use, thoroughly read the user manual.

Headquarters & Sales Dept.	/ 1, Terada, Sinsoku, Nagaokakyo-shi, Kyoto	〒617-0833	☎Kyoto (075)958-3606	FAX (075)958-1296
Tokyo Branch	/ NIDEC Tokyo Vill, 1-20-13, O-Ojaki, Shinagawa-ku, Tokyo	〒141-0032	☎Tokyo (03)3494-0721	FAX (03)3494-0720
Kita Kanto Branch	/ Seojeon Sky Vill, Nam6-19-26, Hatogaya, Saitama	〒334-0013	☎Hatokaya (048)287-1159	FAX (048)287-1173
Nagoya Branch	/ 7F, Kaneyo Vill, Sen10-27ho, Chuwukyu, Nagoya	〒460-0003	☎Nagoya (052)219-6781	FAX (052)219-6780
Kansai Branchi	/ 1, Terada, Sinsoku, Nagaokakyo-shi, Kyoto	〒617-0833	☎Kyoto (075)958-3670	FAX (075)958-3671
Kanajawa Branch	/ 16-7ho, 2chome, Eginisishinmachi, Kanajawa	〒920-0027	☎Kanajawa (076)233-2626	FAX (076)233-2627
Fukuoka Branch	/ 2-30, 6chome, Minami, Hakata Station, Hakata-ku, Fukuoka	〒812-0016	☎Fukuoka (092)411-4750	FAX (092)411-4785
Overseas Sales Office	/ 1, Terada, Sinsoku, Nagaokakyo-shi, Kyoto	〒617-0833	☎Kyoto (075)958-3608	FAX (075)958-3647
Headquarters Service Group	/ 1, Terada, Sinsoku, Nagaokakyo-shi, Kyoto	〒617-0833	☎Kyoto (075)958-3629	FAX (075)958-3695
Tokyo Service Group	/ Seojeon Sky Vill, Nam6-19-26, Hatogaya, Saitama	〒334-0013	☎Hatogaya (048)287-1116	FAX (048)287-1173
Nagoya Service Group	/ 166, Ashiharamachi, Nishiku, Nagoya	〒452-0823	☎Nagoya (052)505-5411	FAX (052)505-5413

Overseas / NIDEC-SHIMPO AMERIA CORP. : Chicago, LA
NIDEC-SHIMPO(STEEL) CORP : Pinghu, Zhejiang
NIDEC-SHIMPO(Xianggang) :Xianggang
NIDEC-SHIMPO EUROPE OFFICE(Germany) : Freiburg
NIDEC-SHIMPO(Shanghai) International Trade Corporation : Shanghai

● Major sales items: Transmission & reducer/electronics/controls/precision machinery/ceramic devices

Homepage & E mail
Homepage http://www.nidec-shimpo.co.jp
E-mail info@nidec-shimpo.co.jp

A Nidec Group Company

SHIMPO

All for dreams

Copyright NIDEC-SHIMPO Corporation. All Rights Reserved.

Catalog No. 76991A

D-1102050