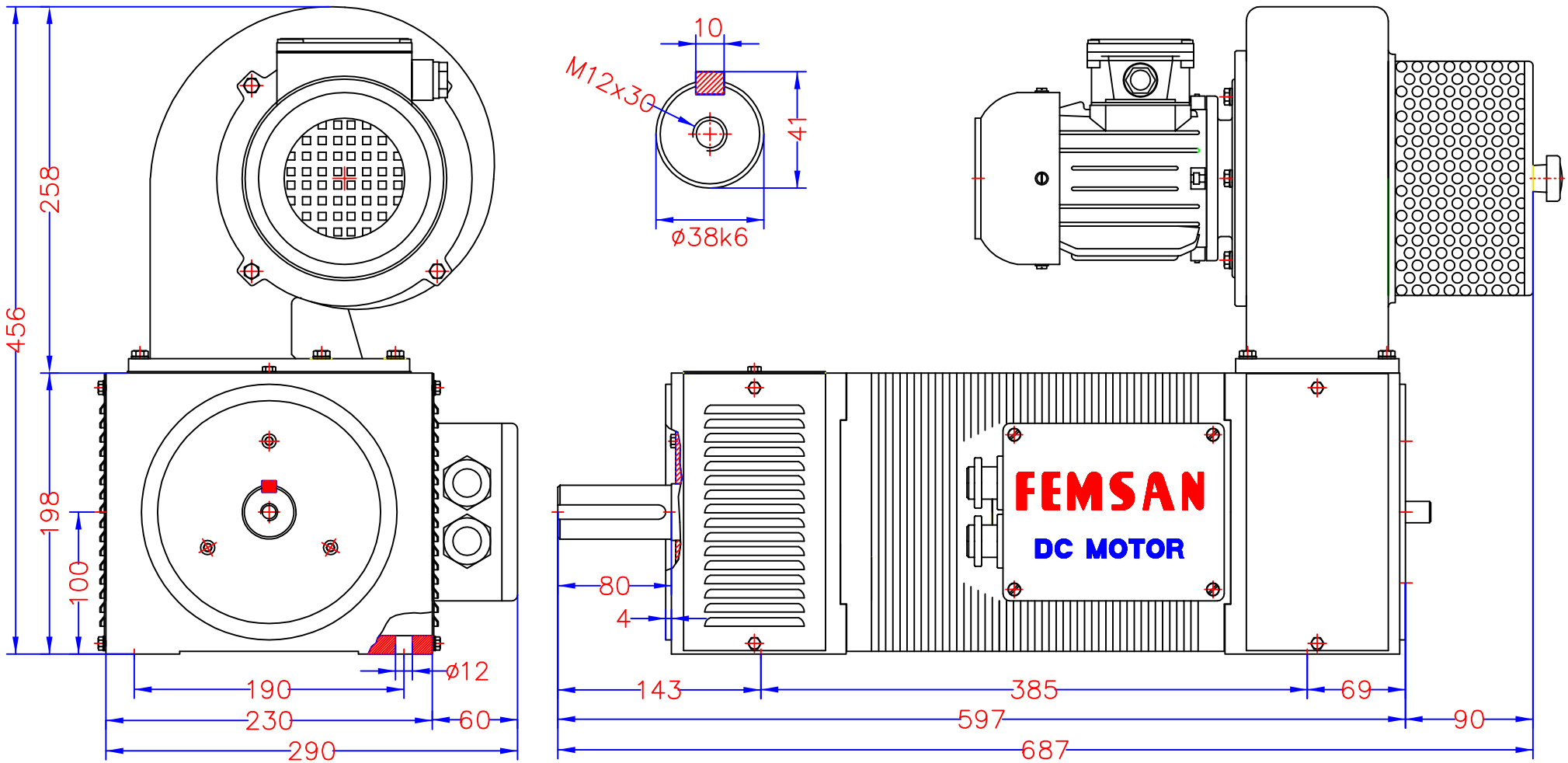.K.10.23.23.R.06.B3.F.1.AU.G.	KG Series	.K.10.23.ST.
100 Frame 230 Type	Dimensions Table of Square Frame, Fully Laminated Drip-Proof Protection (IP23), Forced Ventilation (IC06) DC Motors	Weight : 107 Kgs. Mounting : Foot (IM B3)